1

Engine overview

Code Letters	AFC	AEB	APB	AHA	ATQ
Manufactured from	11.94	11.94	09.99	02.97	
Cylinders / valves per cylinder	6 / 2	4 / 5	6 / 5	6 / 5	6 / 5
Capacity liters	2.771	1.781	2.671	2.771	2.771
Output kW / rpm	128 / 5500	110 / 5700	187 / 5800	142 / 6000	142 / 6000
Torque Nm / rpm	245 / 3000 250 / 3000[1)]	210 / 1750	258 / 1800-4500	280 / / 3200	280 / / 3200
Bore dia. - mm	82.5	81.0	81.0	82.5	82.5
Stroke mm	86.4	86.4	86.4	86.4	86.4
Compression ratio	10.3:1	9.5:1	9.3:1	10.6:1	9.9:1
Hyd. valve lifters	Yes	Yes	Yes	Yes	Yes
Fuel and Ignition System	Multi-Point Injection	Motronic	Motronic	Motronic	Motronic
Octane min.	95 [2)]	95	98 [3)]	98[3)]	

[1)] If unleaded premium plus 98 octane is used.

[2)] Unleaded premium plus 98 octane is also approved.

[3)] Unleaded 95 octane is also approved, though it yields less power.

cardiagn.com

2

Code Letters	AFC	AEB	APB	AHA	ATQ
Exhaust Gas Recirculation (EGR)	Yes	No	No	No	No
OBD with DTC Memory	Yes	Yes	Yes	Yes	Yes
Exhaust emission control	Three Way Catalytic Converter (TWC)				
Oxygen Sensor (O2S) Control	Yes	Yes	Yes	Yes	Yes
Electronic throttle control (E-Gas)	No	No	Yes		
Variable valve timing	No	No	Yes		

cardiagn.com

3

Overview of Oil Changes and Maintenance to my 2001

Service intervals in miles (kilometers)
5,000 miles (8,000 km)[1)]Oil Change and Maintenance Service
10,000 miles (16,000 km)[1)]Oil Change and Maintenance Service
20,000 miles (32,000 km)[2)]Oil Change and Maintenance Service
30,000 miles (48,000 km)[3)]Oil Change and Maintenance Service
40,000 miles (64,000 km)Oil Change and Maintenance Service
50,000 miles (80,000 km)Oil Change and Maintenance Service
60,000 miles (96,000 km)Oil Change and Maintenance Service
70,000 miles (112,000 km)Oil Change and Maintenance Service
80,000 miles (128,000 km)Oil Change and Maintenance Service
90,000 miles (144,000 km)Oil Change and Maintenance Service
100,000 miles (160,000 km)Oil Change and Maintenance Service
The brake fluid must be replaced every 2 years regardless of mileage (kilometers)

[1)] or 6 months after delivery, whichever occurs first.

[2)] or 12 months after delivery, whichever occurs first.

cardiagn.com

3) or 12 months after the least Maintenance Service, whichever occurs first.

The intervals shown in this table are based on vehicles operating under normal conditions. In case of severe conditions, such as extremely low temperatures, excessive dust, etc., it is necessary for certain operations to be carried out in between the given intervals. This applies particularly to engine oil changes and the cleaning or replacing of the air cleaner filter element.

cardiagn.com

4

Overview of Oil Changes and Maintenance from my 2002

Service intervals in miles (kilometers)
10,000 miles (15,000 km)[1)]Oil Change and Maintenance Service
20,000 miles (30,000 km)[2)]Oil Change and Maintenance Service
30,000 miles (45,000 km)Oil Change and Maintenance Service
40,000 miles (60,000 km)Oil Change and Maintenance Service
50,000 miles (75,000 km)Oil Change and Maintenance Service
60,000 miles (90,000 km)Oil Change and Maintenance Service
70,000 miles (105,000 km)Oil Change and Maintenance Service
80,000 miles (120,000 km)Oil Change and Maintenance Service
90,000 miles (135,000 km)Oil Change and Maintenance Service
100,000 miles (150,000 km)Oil Change and Maintenance Service
The brake fluid must be replaced every 2 years regardless of mileage (kilometers)

[1)] Maintenance at 10,000 miles (15,000 km) or 1 year after delivery, whichever occurs first.

[2)] Maintenance at 20,000 miles (30,000 km) or 2 years after delivery, whichever occurs first.

The intervals shown in this table are based on vehicles operating under normal conditions. In

cardiagn.com

case of severe conditions, such as extremely low temperatures, excessive dust, etc., it is necessary for certain operations to be carried out in between the given intervals. This applies particularly to engine oil changes and the cleaning or replacing of the air cleaner filter element.

cardiagn.com

10

Description of work

Engine oil level, checking

After turning engine OFF, wait approximately 3 minutes to allow oil to flow back into oil pan.

- Remove dipstick, wipe with a lint free cloth, and re-insert fully.

Note:

Please observe waste disposal requirements!

- Remove dipstick and read oil level:

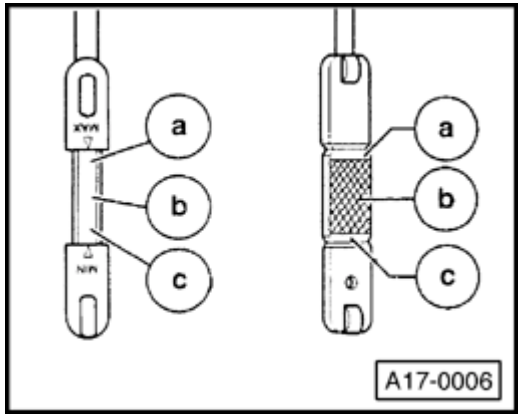

Marking ranges on dipstick.

CAUTION!

- ***If oil level is above -a - there is risk of damage to Three Way Catalytic Converter.***

a - Oil level must be at top edge of shaded area but under no condition above.

b - Oil may be topped off.

c - Oil must be topped off.

cardiagn.com

11

Engine oil, topping off

Specifications:

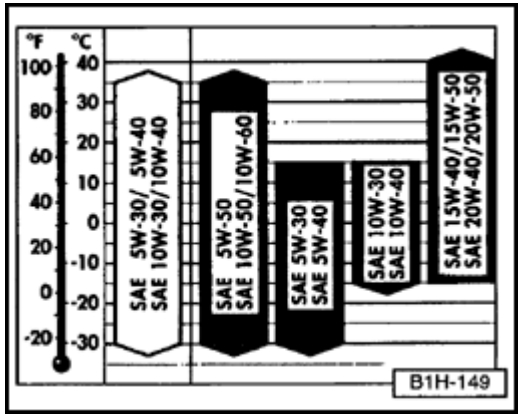

Temperature ranges

A = energy-conserving oil

B = multi-grade oil

Multi-grade oils specification API-SF or API-SG

cardiagn.com

12

Engine oil, oil filter; replacing

Notes:

Replace oil drain plug seal.

Use VAG 1307 or 1358 to extract engine oil. For rapid extration of oil on V6 engines use probe VAG 1358A/4.

Please observe waste disposal requirements!

Do not clean and re-use oil fiter!

Tightening torque of oil drain plug: 40 Nm (30 ft lb).

Engine oil capacity (with filter change)

- 1.8 liter 5V turbo: 3.5 liter (3.7 qt)
- 2.7 liter V6 5V turbo: 6.0 liter (6.3 qt.)
- 2.8 liter V6 5V: 5.7 liter (6.0 qt.)

Procedure

- Loosen oil filter with tensioning strap (e.g. Hazet 2171-1 or equivalent) and remove.

cardiagn.com

- Clean sealing surface on engine.
- Lightly oil rubber seal.
- Thread on new filter and tighten by hand.

cardiagn.com

13

Engine and engine compartment - visual inspection

WARNING!

- ***Repair any defects found.***

- Visually inspect engine and engine compartment for leaks and damage.

- Visually inspect lines, hoses, and connections of fuel system, brake system, and cooling and heating system for leaks, worn areas, porosity, and deterioration.

cardiagn.com

14

Cooling system antifreeze protection and coolant level, checking

CAUTION!

Part numbers are for reference only. Always check with your Parts Dept. for the latest parts information.

Coolant antifreeze, Part No. G 11 prevents frost and corrosion damage, lime deposits, and also raises the boiling temperature. Cooling system must be filled year round with antifreeze and corrosion protection agent.

Concentration of coolant must not be reduced by adding wa ter, even during summer or in warmer climates. Coolant antifreeze percentage must be at least 40%.

Because of its high boiling point, coolant contributes to safe operation at high engine load, especially in warmer climates.

- Check concentration of coolant antifreeze.

  - Antifreeze protection must be approximately -25 ° C (-13 ° F) for US and -35 ° C (-31 ° F) for Canada.

  - For antifreeze protection down to

cardiagn.com

approximately -40° C (-40° F), the percentage of G 11 may be increased up to 60%. The percentage of G 11 must not exceed 60%, higher amounts will decrease frost protection and cooling capacity.

- If antifreeze protection is not adequate, drain off quantity indicated in following table and top off with coolant antifreeze G 11.

cardiagn.com

15

Antifreeze protection down to °C (°F)		Amount
Actual value	**Desired specification**	
0° (32°)	-25° (-13°)	4.0
	-35° (-31°)	5.0
-5° (23°)	-25° (-13°)	3.5
	-35° (-31°)	4.5
-10° (14°)	-25° (-13°)	3.0
	-35° (-31°)	4.0
-15° (5°)	-25° (-13°)	2.0
	-35° (-31°)	3.0
-20° (-4°)	-25° (-13°)	1.5
	-35° (-31°)	2.0
-25° (-13°)	-35° (-31°)	1.5
-30° (-22°)	-35° (-31°)	1.0
		0.5

cardiagn.com

-35° (-31°)	-40° (-40°)	

- After road test, check coolant concentration.

- Check coolant level.

cardiagn.com

16

Delivery inspection:

At delivery inspection coolant level must be at max. mark on expansion tank (engine cold).

Inspection service:

Coolant level between min. and max. markings. With engine cold, coolant level must be between min. and max. markings of reservoir; with engine warm, level may be slightly above max. marking. If coolant level is too low but antifreeze protection is adequate, add required amount of mixture.

If coolant level is too low but antifreeze protection adequate, add missing quantity according to following mixing ratios:

Antifreeze protection down to	Coolant additive	Water
-25 ° C (-13 ° F)	approx. 40 %	approx. 60 %
-35 ° C (-31 ° F)	approx. 50 %	approx. 50 %
-40 ° C (-40 ° F)	approx. 50 %	approx. 50 %

cardiagn.com

17

Dust and pollen filter element, replacing

- Remove right scuttle panel.

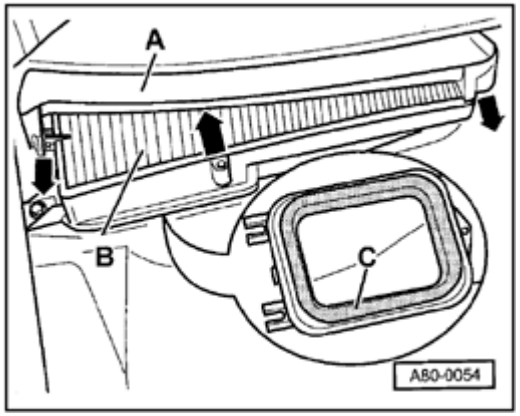

- Remove rain channel -A-.
- Remove filter element -B- from housing.

Notes:

Be sure dust and pollen filter housing gasket -C- is positioned correctly and undamaged.

Rain channel -A- must be properly installed to prevent water from running onto dust and pollen filter and into heating system.

- Install new filter element.
- Install gasket-C-, rain channel -A-, and right scuttle panel.

cardiagn.com

18

Noise insulation, removing and installing

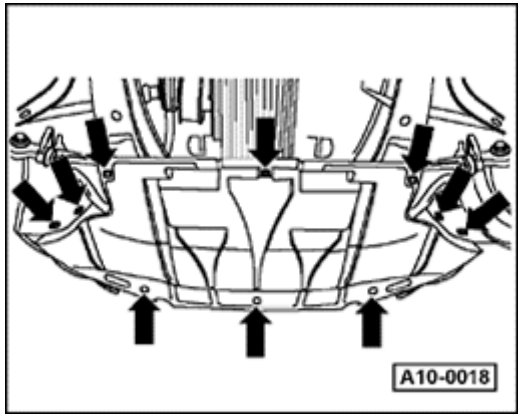

- Pull insulation pan to rear, off bumper cover and remove.

Note:

When installing noise insulation, be sure that it is inserted at front, over bumper cover.

cardiagn.com

19

Diagnostic Trouble Code (DTC) Memory interrogating, with VAG 1551 Scan Tool

Connecting Scan Tool (ST) VAG 1551- (up to m.y. 1996)

- Move shift lever into position "P" or "N", and apply parking brake (vehicles with Automatic Transmissions).

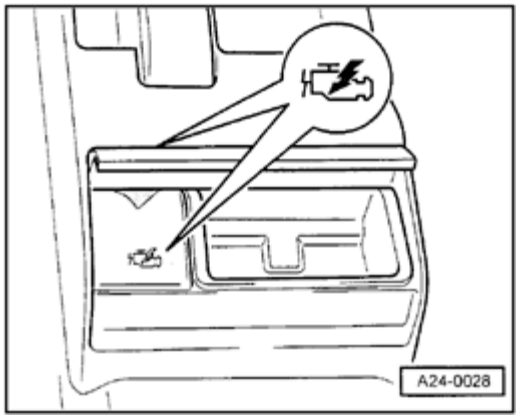

- Open rear ashtray (center console) and remove Data Link Connector (DLC) cover.

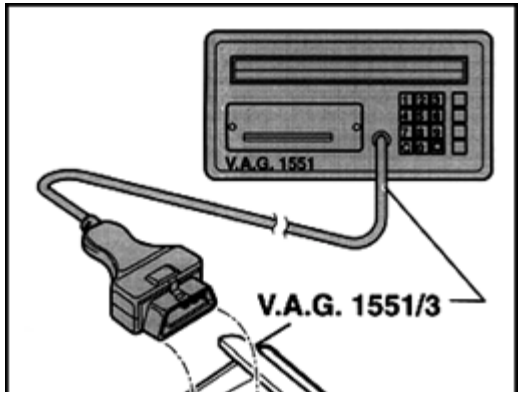

- With ignition turned OFF connect Scan Tool (ST) VAG 1551 to Data Link Connector (DLC) with Adapter Harness VAG 1551/3.

cardiagn.com

20

Connecting Scan Tool (ST) VAG 1551- (from m.y. 1997)

DLC is located below driver's knee bar to left side of steering wheel

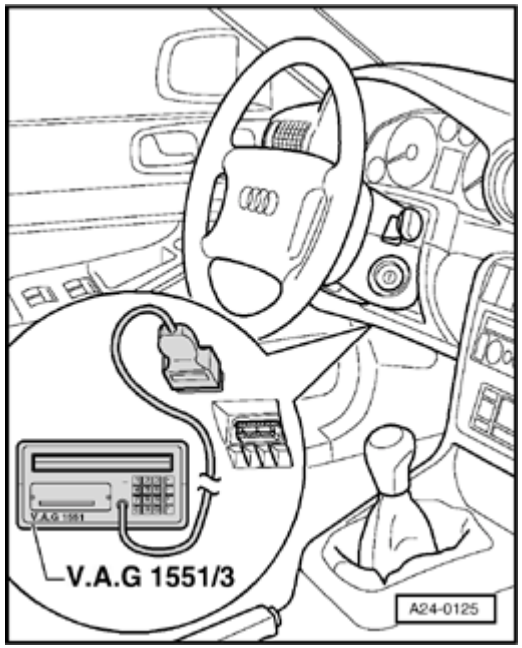

- Connect Scan Tool VAG 1551/1552 with diagnostic cable VAG 1551/3.

Continuation for all vehicles

- Start engine and run at Closed Throttle Position.
- Press brake pedal briefly once.
- Press print button to switch printer on (indicator lamp in button lights up).
- Press key -1- for "Rapid Data Transfer" mode.
- Press key -O- twice to enter address word 00 for "Automatic Test Sequence".
- Press -Q- key to confirm input.

VAG 1551 displays all known address words in sequence.

cardiagn.com

21

X DTCs recognized

If control module answers with its identification the number of stored Diagnostic Trouble Codes (DTCs) will be indicated or "No DTCs Recognized" will be displayed.

If one or more DTCs are stored, all stored DTCs will be dis played and printed out in sequence. Following this, VAG 1551 displays the next address word.

VAG On Board Diagnostic HELP

1 - Rapid data transfer *)

2 - Blink code output *)

- Automatic test sequence is ended once the readout shown here appears in the display.

* Operating modes 1 and 2 are displayed alternately.

- Turn ignition OFE

Corrective action must be taken if DTCs are stored. Diagnostic report should be attached to repair order.

Note:

For resetting service internal display and performing any emissions test VAG 1551 must remain connected.

cardiagn.com

22

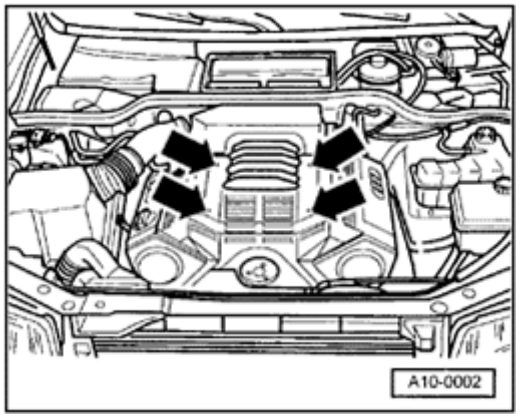

Spark plugs, replacing

- Remove engine cover.

Note:

To replace spark plugs, use Spark Plug Wrench 3122B.

- Install new spark plugs.
  - Tightening torque: 30 Nm (22 ft lb)

cardiagn.com

23

Plenum chamber and water drain valve, checking for debris, cleaning if necessary

- Check plenum chamber for signs of debris, e.g. from leaves,clean If necessary.

- Check water drain valves for debris and proper operation; clean or replace if necessary.

Note:

The water drain valves must not be blocked by wax or undercoating, and must close properly.

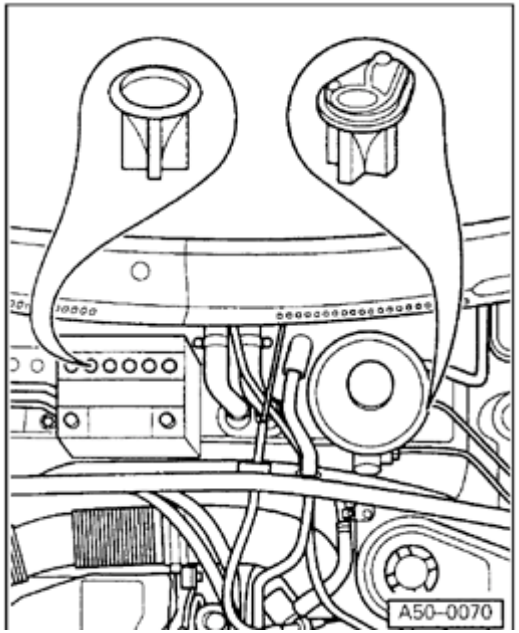

Position of the water drain valves:

left - below brake servo unit

right - below battery

cardiagn.com

24

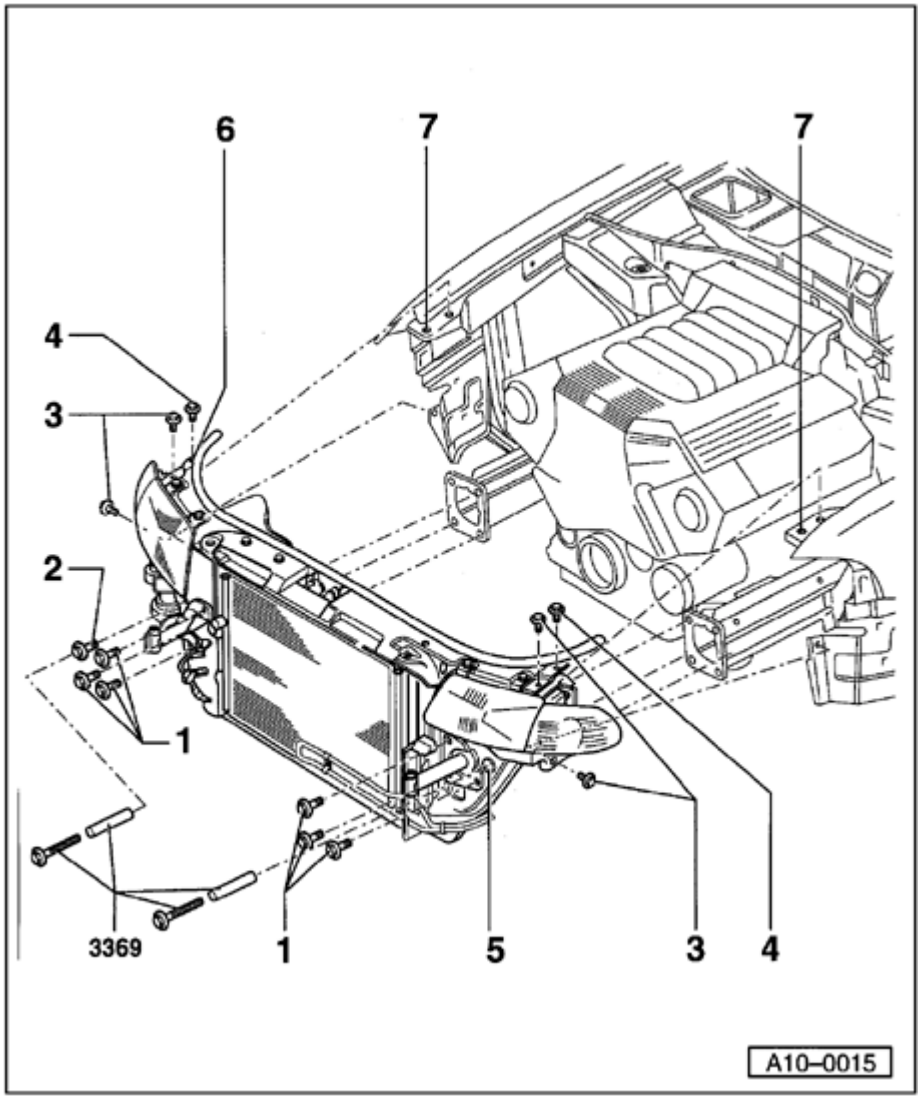

Lock carrier, moving into service position

Special tools

- 3369

1 - 45 Nm

2 - 45 Nm

3 - 10 Nm

4 - 10 Nm

5 - Hole

- For tool 3369

6 - Hole in lock carrier

7 - Hole in fender panel

cardiagn.com

25

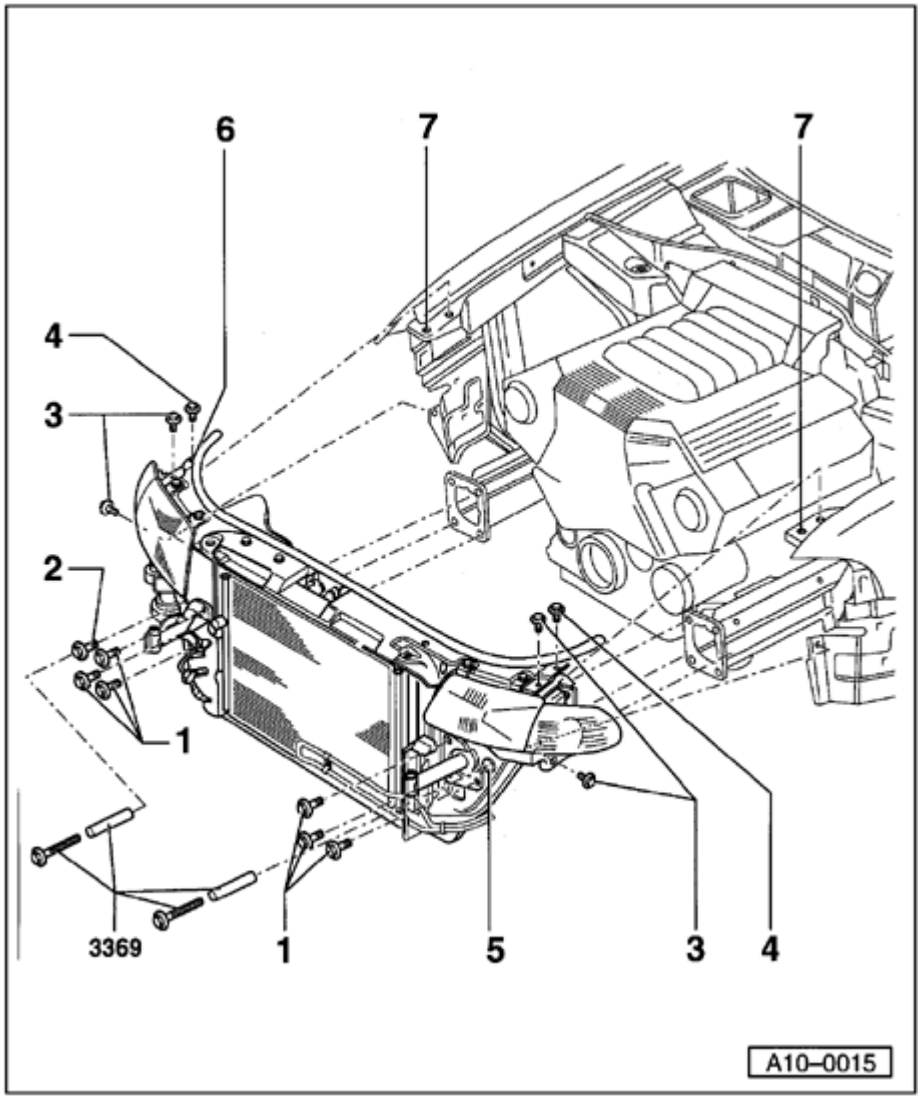

- Remove front bumper ⇒ *Repair Manual, Body Exterior, Repair Group 63* .
- Undo 3 quick-release fasteners on noise insulation at front.
- Remove air duct between lock carrier and air cleaner (air duct is bolted to lock carrier).
- Remove retainer clips (if installed) for wiring harness to left of radiator cowl.
- Remove bolt -2- on right and thread in special tool 3369.

cardiagn.com

26

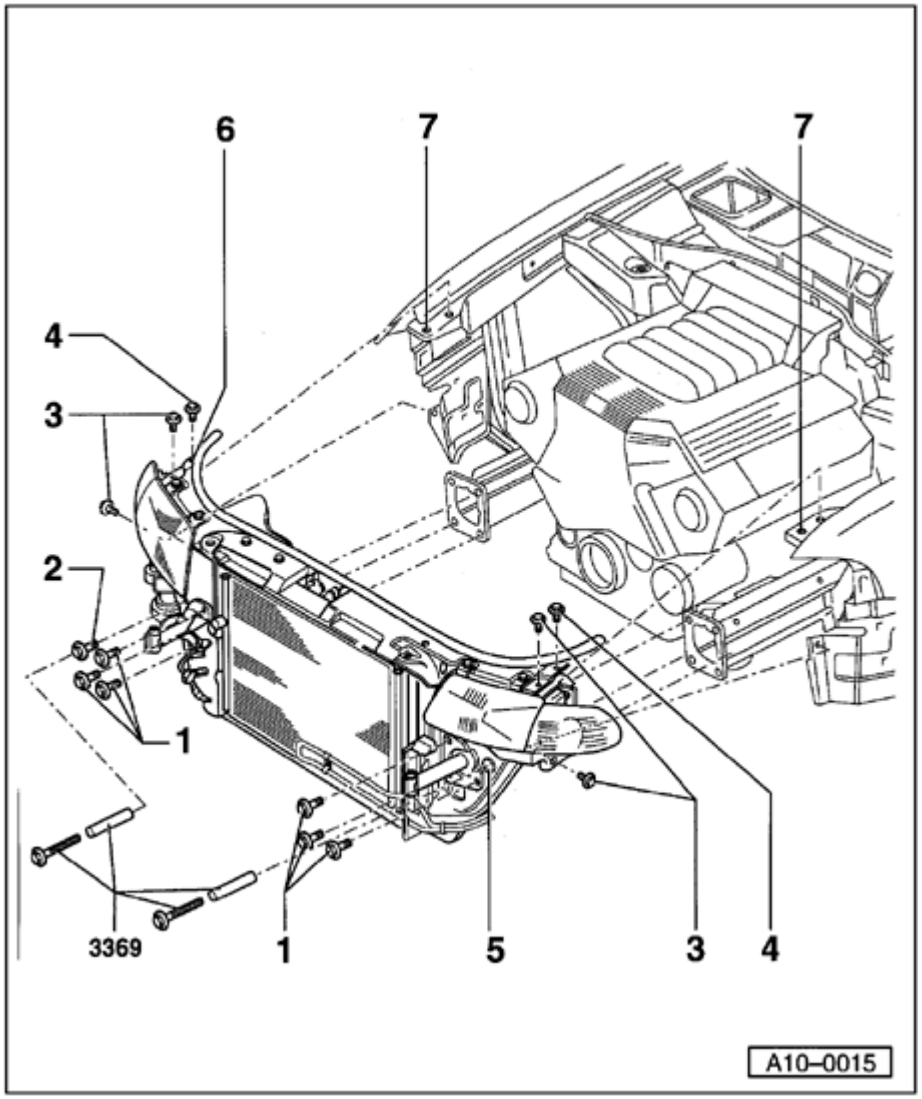

- Thread special tool 3369 into hole -5- (left).
- Remove bolts -1- and -3-.
- Remove bolts -4- and pull whole lock carrier out as far as it will go.
- Secure lock carrier with suitable M6 bolts in hole -6- (lock carrier) and hole -7- (fender panel).
- When lock carrier has been installed, check that wiring next to radiator is correctly routed.
- Install front bumper ⇒ *Repair Manual, Body Exterior, Repair Group 63* .

cardiagn.com

27

V-belt and ribbed belts, replacing (4-cylinder engine AEB)

- Lock carrier must be in service position ⇒ Page 24

Removing

Vehicles with air conditioner

- Remove noise insulation ⇒ Page 18 .

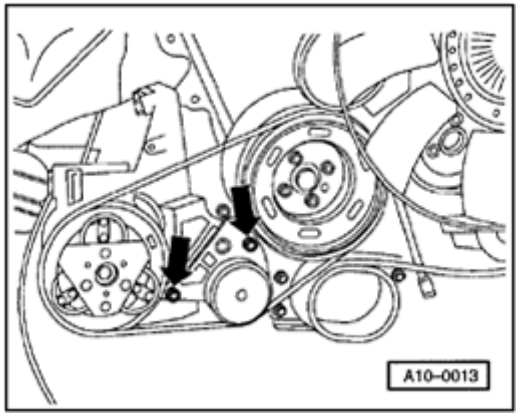

- Loosen securing bolts of tensioning roller for ribbed belt for A/C compressor (arrows).
- Loosen ribbed belt and remove.

All models

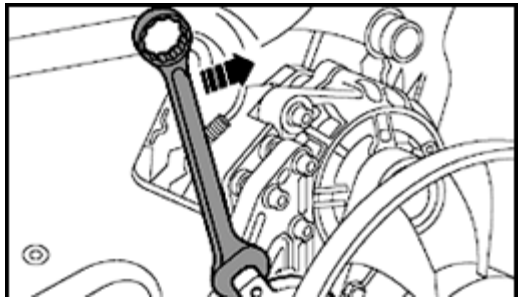

- To loosen ribbed belt, turn tensioning element in direction of arrow.

cardiagn.com

28

Note:

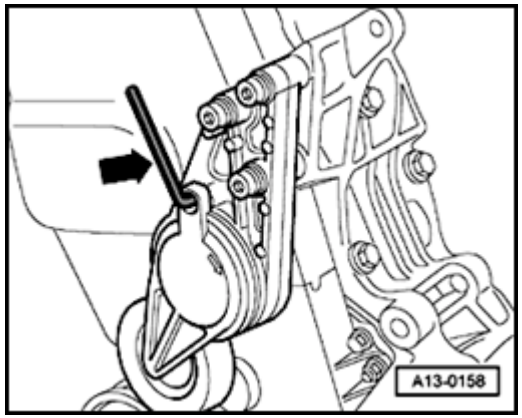

The tensioning element for the ribbed belt can be locked in position by inserting a suitable hex key (arrow) or mandrel 3204 into the securing hole.

- Remove ribbed belt and release tensioning element.
- Secure belt pulley for viscous fan with an M5 x 60 bolt and unscrew using an 8 mm hex key.

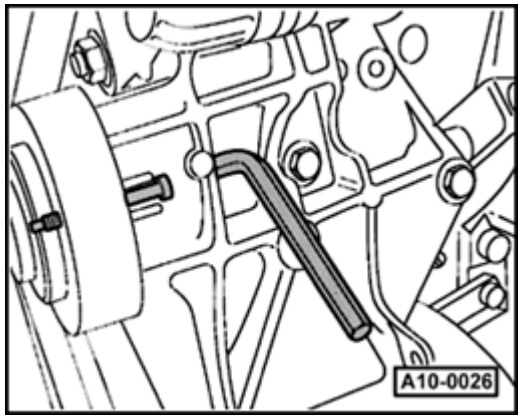

- Remove viscous fan.

cardiagn.com

29

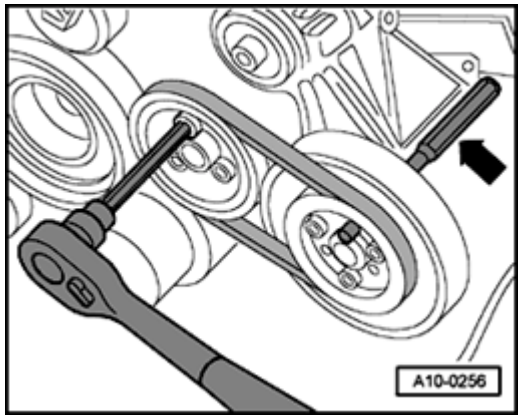

- Remove V-belt pulley from coolant pump. Counterhold by inserting pin (arrow) in pump pulley.
- Remove V-belt.

Installing

Installation is in the reverse order of removal. Also, note the following:

- Install V-belt on pulleys and assemble two sections of pulley on coolant pump without tightening bolts.
- Tighten bolts securing two sections of pulley in stages while turning coolant pump.
  - As bolts are tightened, V-belt should gradually move outward until seated on running surface.
- Tighten bolts to 25 Nm.

cardiagn.com

30

Note:

It is not possible to adjust the tension of the V-belt for the coolant pump.

- Tighten viscous fan mounting to 45 Nm.

- Install ribbed belt over crankshaft pulley, viscous fan pulley and power steering pump pulley. If necessary, pull belt upward using a suitable tool.

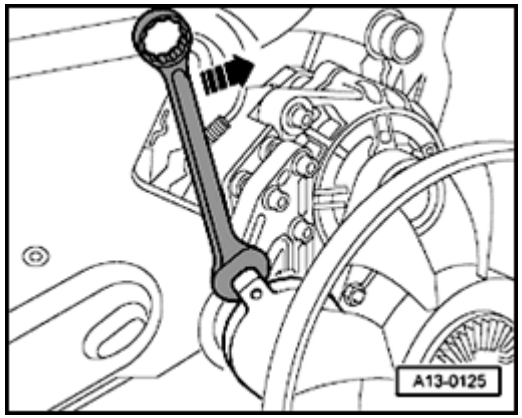

- Turn ribbed belt tensioning element in direction of arrow.
- Install ribbed belt over Generator pulley last. Release tensioning element.
- Check that ribbed belt is properly seated.
  - Routing of ribbed belt ⇒ Page 32

Vehicles with air conditioner

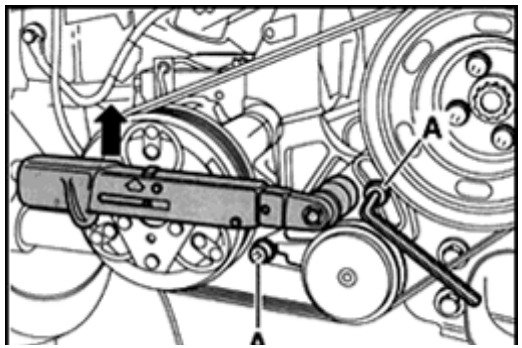

- Install ribbed belt for A/C compressor.
  - Routing of ribbed belt ⇒ Page 32
- Apply torque wrench to hex on tensioning roller and tension with a torque of 25 Nm
- Tighten bolts -A- to 20 Nm

cardiagn.com

31

All models

- Start engine and check belt running.

- Check again to ensure that bolts for coolant pump pulley are tightened to correct torque.

cardiagn.com

32

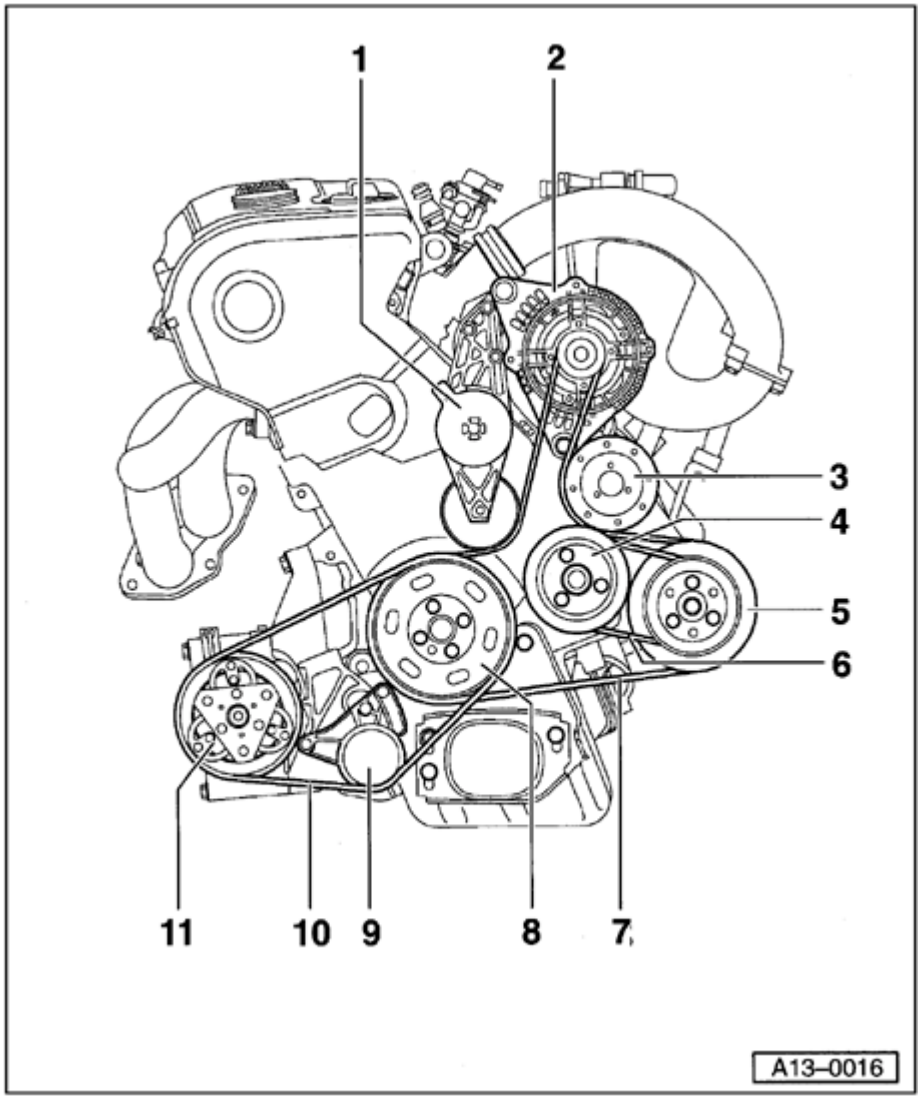

Routing of V-belt and ribbed belts

1 - Tensioning element for ribbed belt

2 - Generator

3 - Viscous coupling

4 - Coolant pump

5 - Power steering pump

6 - V-belt

- For coolant pump

7 - Ribbed belt

- For Generator, power steering pump and viscous fan

8 - Vibration damper

cardiagn.com

33

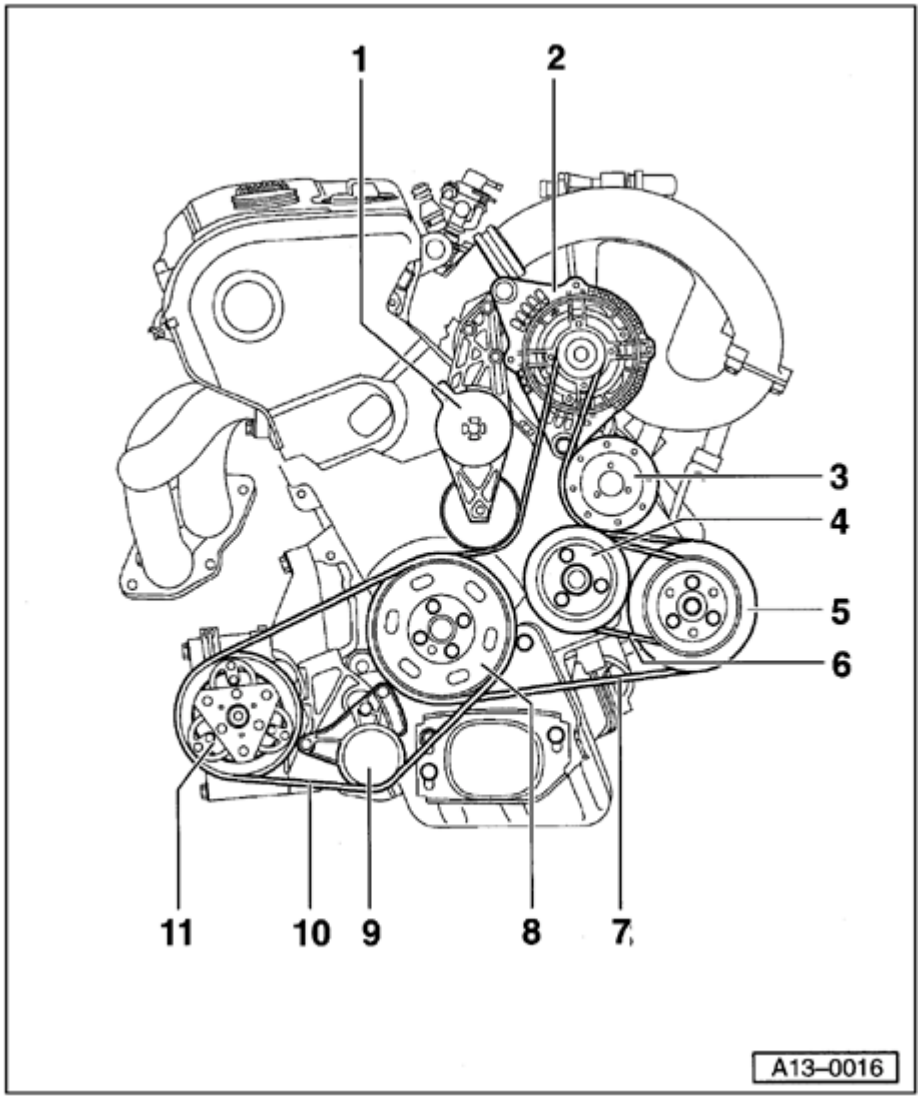

9 - Tensioning element for ribbed belt

- For A/C compressor

10 - Ribbed belt

- For A/C compressor

11 - A/C compressor

cardiagn.com

34

Poly-ribbed belt, checking, removing, and replacing

Check condition of Poly-ribbed belt for:

- Splits in base material (cracks, core fractures, cross section fractures).
- Separation of layers (top layer, tensile cords).
- Bursting on base material.
- Fraying of cords.
- Flank wear (material flaking, frayed flanks, hardening of flanks (glassy surface), and surface cracks).
- Traces of oil and grease.

Note:

If defects exist, replace Poly-ribbed belt.

Poly-ribbed belt replacement interval

- Every 144,000 km (90,000 mi.)

cardiagn.com

Removing

- Move body, front, to engine service position ⇒ Page 24 .

- Remove ribbed V-belt cover.

cardiagn.com

35

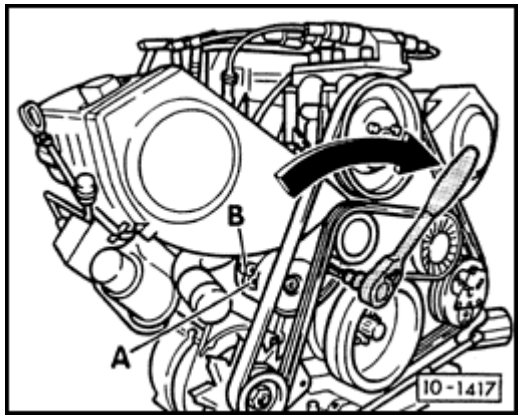

The Poly-ribbed belt is removed by rotating tensioner in a clockwise direction with a 17mm wrench or socket. Hold tensioner in place during belt removal with Drift 3204.

- Remove Poly-ribbed belt.

Note:

When removing it is important to mark the running direction of belt. Changing the belt running direction could lead to excess wear.

Installing

- Install Poly-ribbed belt over drive pulley, guide pulley, and tensioning pulley in that order.
- Remove Drift 3204.
- Install ribbed V-belt cover.

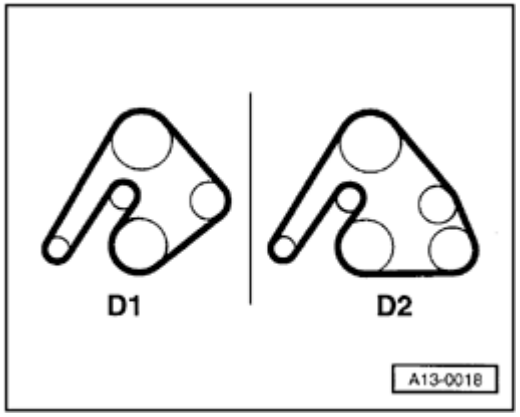

Routing of Poly-ribbed belt -D2-.

cardiagn.com

36

Manual transmission/final drive oil level, checking

5-speed manual transmission 012/01W

Special tools and equipment

- Key 3357, or
- Hex key socket attachment, 17 mm AF

Note:

- *The vehicle must be absolutely horizontal when checking transmission oil level. This work is best performed over an inspection pit or using a four column lifting platform.*
- *The prescribed oil level is to be adhered to exactly; the transmission reacts very sensitively to over-filling.*
- *The oil filter plug is on the left of the transmission below the speedometer sender; it may be concealed by the heat shield for the drive shaft.*

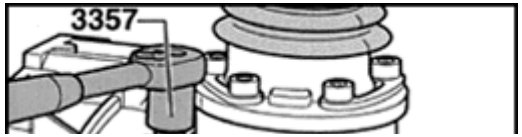

- *Depending on the version installed, use either special tool 3357 or a 17 mm hex socket key to loosen the oil filter plug.*

cardiagn.com

37

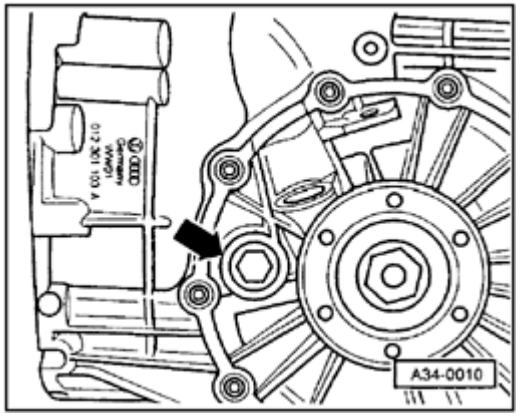

- To check oil level, unscrew oil filler plug (arrow).
- Check oil level with locally manufactured tool, e.g. a piece of angled wire.

• Specification: oil level 7 mm below bottom edge of oil filler hole

CAUTION!

If the oil level is below the specified area, check the transmission for leaks. It is not sufficient to top up with oil.

- If transmission has no leaks, top up with gear oil: SAE 75 W 90 (synthetic oil), part number G 052 145 S2 (1 liter).

CAUTION!

Part numbers are for reference only. Always check with your Parts Dept. for the latest parts information.

- Install oil filler plug.
- Tighten oil filler plug to 25 Nm.

cardiagn.com

38

6-spd. manual transmission 01E all wheel drive

Note:

- *For checking oil level the vehicle must be stationary and on a level surface (e.g engine off, standing on an alignment lift).*
- *The oil level must be kept at the specified level. The transmission may be damaged by over-filling.*

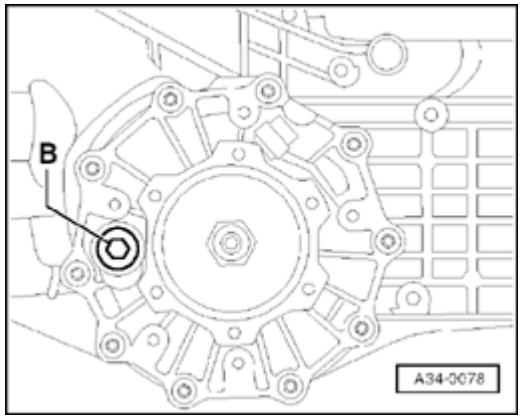

- Remove filler plug -B-, on differential cover, in front of drive axle flange.
- Check oil level using tool such as angled wire.

  Specification: level 1 mm below bottom of oil filler hole.

CAUTION!

If the oil level is too low, the transmission must be checked for leaks and repaired. It is not sufficient to just top off oil.

- If there are no leaks, top up with gear oil: SAE 75 W 90 (synthetic oil), part number G 052 145 S2 (1 liter).

CAUTION!

Part numbers are for reference only. Always check with your Parts Dept. for the latest parts information.

cardiagn.com

- Tighten oil filler plug to 40 Nm.

cardiagn.com

39

Automatic Transmission Fluid (ATF), checking (01V transmission)

Requirements for check:

- Vehicle standing on level surface.
- Transmission must not be in fail-safe mode.
- Shift lever in "P" position, parking brake applied.
- Engine idling.
- Air Conditioner and heater OFF.
- ATF temperature must not exceed 40 ° C (104 ° F) at start of test.

CAUTION!

Part numbers are for reference only. Always check with your Parts Dept. for the latest parts information.

Notes:

Only ATF with designation ESSO LT 71 141

cardiagn.com

- may be used. Do not use any lubricant additives.
- Automatic transmission fluid: ATF, part number G052 162 A2 (1 liter)
- An ATF level check when transmission oil temperature is too low results in overfilling; when too high results in underfilling.

cardiagn.com

40

CAUTION!

- ***Too much or too liffle ATF will affect the operation of the transmission. The ATF level must be checked at regular intervals.***

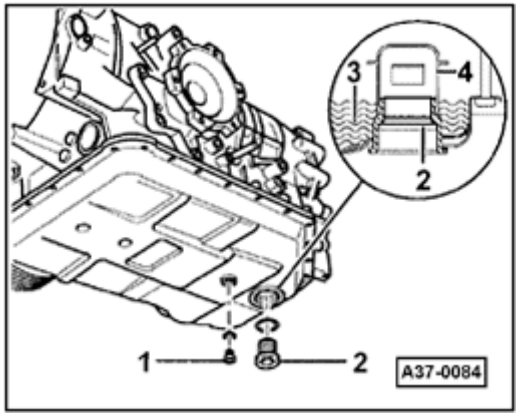

The oil level is correct if only a slight amount of oil runs out when ATF temperature is between 30 ° C (86 ° F) and 45 ° C[1)] (113 ° F) (caused by increase of oil level when heated).

WARNING!

- ***Wear protective glasses.***

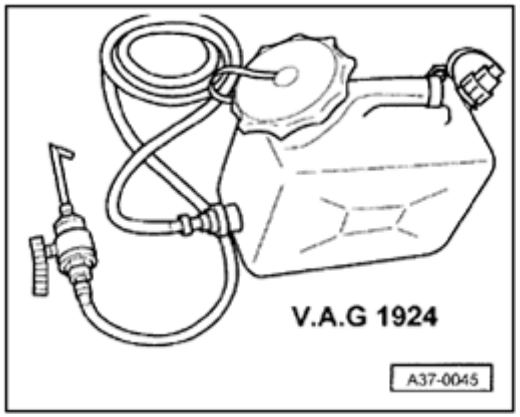

- Hang filled ATF reservoir VAG 1924 as high as possible (example: radiator grill).
- Shift lever in "P", engine running at idle.
- Place oil drip pan under transmission oil pan.

The ATF temperature is measured temperature using the VAG 1551 Scan Tool.

- Connect VAG 1551 as described on ⇒ Page 19 .
- Press key -1- for " Rapid Data Transfer " mode.

cardiagn.com

[1)] For warmer climates, 50° C (122° F).

cardiagn.com

41

- Press keys -0- and -2- to select address code -02- "Transmission Electronics", and confirm with key -Q-.

- Press → key to advance program.

- Press keys -0- and -8- to select address code -08- "Read Measuring Value Block' and confirm with key -Q-.

- Press keys -0- and -4- to select address code -04- "Display Group Number", and confirm with key -Q-.

Read measuring value block	**1**
1 2 3 4	

- Display shows ATF temperature (in °C) appears in measuring value block 1.

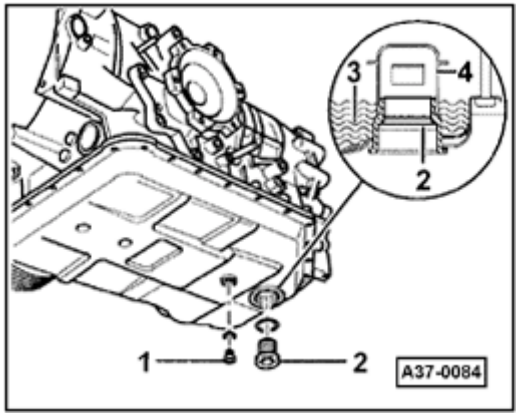

- Remove ATF filler plug -2-.
- With ATF temperature between 30° C (86° F) and 45° C[1)] (113° F[1)]) a slight amount of fluid will flow from filler hole when ATF level is correct.
- If necessary drain or top off ATF to attain correct fluid level.
- Top off ATF with filler hook from VAG 1924 ATF reservoir.
- Insert VAG 1924 ATF reservoir filler hook into filler hole and top off until a slight amount of fluid flows from filler hole.

[1)] For warmer climates, 50° C (122° F).

cardiagn.com

42

Note:

Fit filler hook into one of the oil deflector cap -4- slots placed on the filler opening.

CAUTION!

- ***Do not press filler hook upward or oil deflector cap can be pushed off.***

- Reinstall ATF filler plug -2-.

  - Tightening torque: 80 Nm (59 ft lb).

- Press → key to advance program.

- Press keys -0- and -6- to select address code -06- "Data Transmission Ended" and confirm with key -Q-.

cardiagn.com

43

Final drive oil level, checking

Automatic transmission 01V all wheel drive

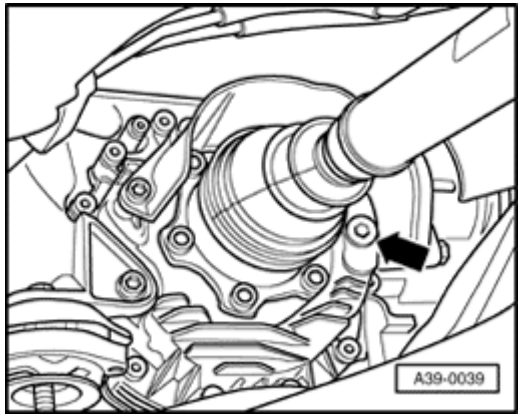

- Remove oil filler plug -arrow- and check level.

  Specification: oil level must be at bottom of filler hole.

CAUTION!

If the oil level is too low, the transmission must be checked for leaks and be repaired. It is not sufficient to just top off oil.

- If there are no leaks, fill to correct level using gear oil: SAE 75 W 90 (synthetic oil), part number G 052 145 S2 (1 liter)
- Replace sealing ring on plug.
- Install plug and tighten to 30 Nm.

cardiagn.com

44

Power steering fluid level, checking

Requirements:

- Engine at normal operating temperature.
- Vehicle stationary.
- Front wheels in straight ahead position.

- Remove cap with dipstick from expansion tank and wipe off dipstick with a lint-free cloth.

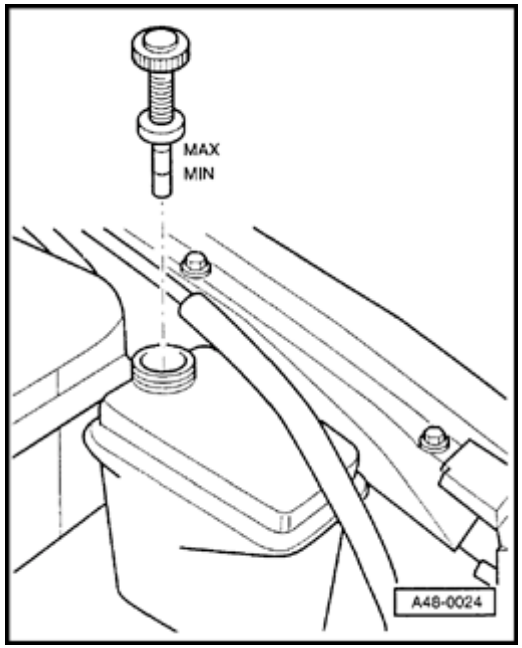

- Reinstall cap with dipstick and remove again.
- Read max. and min. markings on dipstick. top off with G 002 000 hydraulic oil, if necessary, as follows:

Delivery inspection:

Fluid level must be at max. marking when inspection is performed.

Inspection service:

Fluid level between min. and max. markings.

Note:

If oil level has dropped to the min. marking, check power steering system,

cardiagn.com

including hoses, and lines. It is not enough simply to top off the hydraulic oil.

cardiagn.com

45

Tie rod ends, checking

Requirements:

- Vehicle raised, wheels off the ground.

- Check play by moving tie rods and wheels.

  - Specification: no play.

- Check attachment.

- Check dust boots for damage and correct installation.

cardiagn.com

46

Tires, checking

Delivery inspection:

- Check treads and side walls for signs of damage, if necessary, remove any foreign bodies, such as nails and glass splinters.

- Check that tires are the same type and tread pattern.

Inspection service:

- Measure tread depth.

  - Minimum tread depth: 1.6 mm (0.0625 in.)

If tread depth is close to legal permissible minimum, i.e. if the 1.6 mm high wear indicator spaced around tire circumference no longer has any tread pattern, the customer must be in formed.

Tires should also be checked for scuffing, wear on one side, porous side walls, cuts, and fractures.

Any defects found must be reported to the customer.

WARNING!

cardiagn.com

- ***For safety reasons, only tires of same type and tread pattern should be installed on all four wheels.***

cardiagn.com

47

CAUTION!

- ***Tires of same type and tread pattern must be used on cars with All Wheel Drive (otherwise risk of damage to central differential).***

- Check tread wear pattern:

Tread wear pattern on front tires is an indication of whether toe and camber settings need to be checked:

- "Feathering" on tread indicates incorrect toe.
- If tread is worn on one side, this is usually caused by incorrect camber.

If wear of this nature is noticed, check wheel alignment.

cardiagn.com

48

Tire inflation pressure, checking, and correcting (including spare wheel)

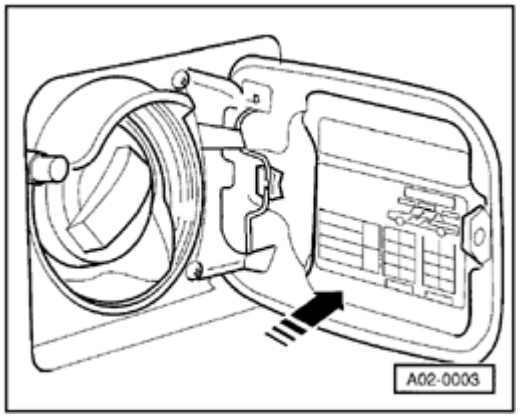

The correct inflation pressures for summer tires are listed on the sticker on the inside of the fuel tank filler flap.

Note:

- *The pressures listed on the sticker apply to cold tires. When the tires are warm the actual pressures will be higher but must not be reduced.*
- *When using winter tires, pressures should be increased by 3 psi.*

Spare wheel

- Spare wheel with standard-size tire.

  Inflate to the maximum pressure specified for the vehicle.

- Temporary (compact) spare wheel

  The correct inflation pressure is indicated on the tire side wall.

Note:

- *It is important to install dust caps on the tire valves. Otherwise, dirt can obstruct the valve pin and cause loss of air.*
- *On vehicles with steel rims and full-diameter wheel covers, check the valve extensions for dirt and damage which could cause leaks. Replace if necessary.*

cardiagn.com

49

Wheel bolts, tightening to specified torque

Trim cap

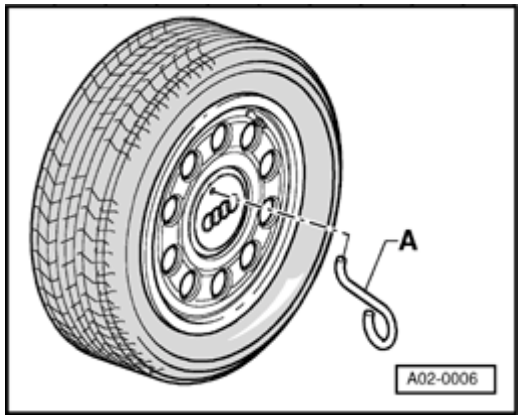

Puller -A- for removing the trim cap is in the vehicle tool kit.

Wheel bolts

The adapter for loosening and tightening the anti-theft wheel bolts is in the vehicle tool kit.

Note:

Ensure that the wheel bolts are tightened diagonally and alternately to the following tightening torque:

Tightening torque: 120 Nm (89 ft lb)

- After completing work, replace adapter in vehicle tool kit.

Correct installation of wheels

When installing the wheels, note the following points to ensure that the wheels remain secure at all times:

- Always tighten the wheel bolts to the specified torque; excessive torque can distort the wheel bolt seats in the rim.

cardiagn.com

- When installing a wheel, do not torque down the first wheel bolt immediately (for instance, with an impact wrench). This would prevent the other bolts from centering the wheel properly when they are threaded in; the rim could then come loose, even though the bolts have been tightened to the specified torque.

- Before installing the wheels, examine the seats of the wheel bolts and the contact surfaces between the rims and the hubs for rust and corrosion. Clean off these parts if necesary, otherwise this can affect the clamping force of the bolts after installation, and the rims can come loose.

WARNING!

- ***If the points listed above are not observed, the wheel mountings can come loose and the wheel bolt seats can become distorted.***

- ***This distortion may be very slight and not visible to the naked eye.***

- ***Even this slight distortion of the wheel bolt seats can prevent the rims from being held firmly and the wheels will come loose repeatedly.***

cardiagn.com

51

Brake pad thickness, checking

Inspection service:

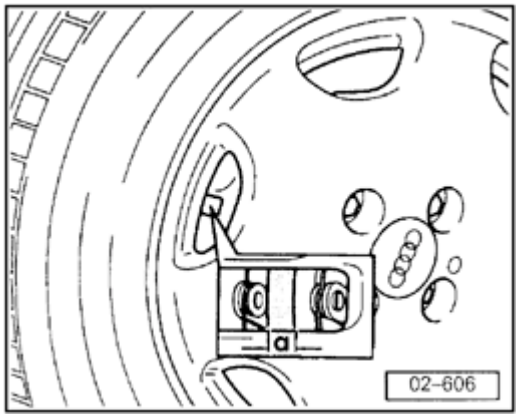

Dimension -a- = pad thickness including backing plate. Wear limit = 7 mm (0.28 in.).

Thoroughly remove all dirt from wheels.

- Determine thickness of outer and inner pads by inspecting visually.
  - View through opening in wheel.
  - Use a flashlight and mirror if necessary.

If pad thickness including backing plate is 7 mm (0.28 in.) or less the brake pads have reached or exceeded wear limit and must be replaced.

- Tighten wheel bolts to 110 Nm (81 ft lb).

cardiagn.com

52

Brake system - visual inspection

WARNING!

- ***Any defects found must be repaired.***

- Inspect brake master cylinder, vacuum brake booster, hydraulic unit, brake pressure regulator, and brake calipers for leaks and damage.

- Brake hoses must not be twisted.

- Brake hoses must not make contact with any part of vehicle when steering is at full lock.

- Inspect brake hoses for porosity and deterioration, brake hoses and brake lines for chafing.

- Inspect the brake connections and attachments for correct seating, leaks and corrosion.

cardiagn.com

53

Brake fluid level, checking

WARNING!

- ***Use only new brake fluid confomning to US Standard FMVSS 116 DOT 4. Genuine VW, Audi brake fluid conforms to this specification.***

- ***Brake fluid is poisonous. Do not ingest brake fluid. Wash thoroughly with soap and water if brake fluid comes into contact with the skin.***

CAUTION!

- ***Do not let brake fluid come into contact with paint because of its caustic effect***

- ***Brake fluid absorbs moisture from surrounding air and should always be stored in airtight containers.***

Delivery inspection:

Brake fluid level must be at max. marking at time of delivery.

Note:

To avoid brake fluid over flowing do not exceed the max. marking.

cardiagn.com

54

Inspection service:

- Always consider brake pad wear when checking brake fluid level. When driving, a slight drop in brake fluid level results from normal wear and automatic adjustment of brake pads.

- If brake fluid level is at minimum marking or slightly above, brake pads are close to wear limit, it is not necessary to add fluid.

- If brake pads are new or well away from wear limit, brake fluid level must be between min. and max. markings.

- If brake fluid level has dropped below min. marking, check brake system before adding brake fluid.

cardiagn.com

55

Brake fluid, changing

WARNING!

- ***Use only new brake fluid conforming to US Standard FMVSS 116 DOT 4. Genuine VW, Audi brake fluid conforms to this specification.***
- ***Brake fluid is poisonous. Do not ingest brake fluid. Wash thoroughly with soap and water if brake fluid comes into contact with the skin.***

CAUTION!

- ***Do not let brake fluid come into contact with paint because of its caustic effect***
- ***Brake fluid absorbs moisture from surrounding air and should a/ways be stored in airtight containers.***
- ***Do not allow brake fluid to come into contact with fluids containing mineral oils or gasoline cleaning products.***
- ***Mineral oils damage plugs and seals of the brake system.***

cardiagn.com

56

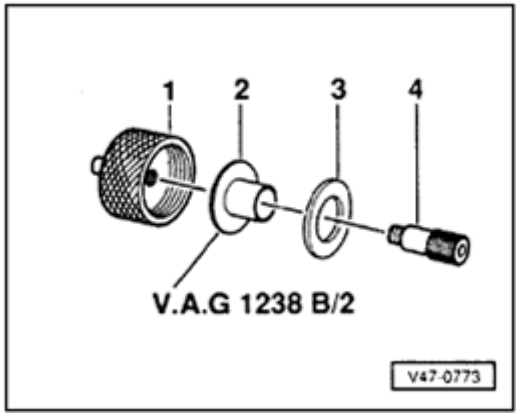

- Connect Brake Bleeder US 1116 to brake fluid reservoir. Use adapter -1-, plastic fitting VAG 1238 B/2, seal -3-, and connector -4-.
- Use a suction bottle to draw off as much brake fluid as possible.

CAUTION!

- ***Do not use cleaning cloths that have been contaminated by mineral oils for cleaning brake filling and bleeder fittings.***
- ***Do not re-use extracted brake fluid.***

- Install and adjust brake pedal depressor between driver's seat and brake pedal.
- Open bleeder fittings and pump in fresh fluid forcing out appropriate amount of used brake fluid.

Note:

Please observe waste disposal requirements.

cardiagn.com

57

Sequence: Brake calipers	Brake fluid quantity which must flow out of brake calipers:
rear right	approx. 0.3 liters (0.32 qt)
rear left	approx. 0.3 liters (0.32 qt)
front right	approx. 0.2 liters (0.21 qt)
front left	approx. 0.2 liters (0.21 qt)

Total quantity: 1 liter (1.06 qt)

- Disconnect Brake Bleeder US 1116 from brake fluid reservoir and remove brake pedal depressor.

- Check pedal pressure and free travel at brake pedal.

  - Max. free travel: 1/3 of pedal travel.

cardiagn.com

58

Transport locks, removing

On certain vehicle versions, blocking elements -1- (in a luminous color) are installed in the front suspension struts. These models are recognizable by a tag on the mirror.

- Relieve pressure on coil spring (e.g. vehicle on lift).

Note:

It is not necessary to remove wheels.

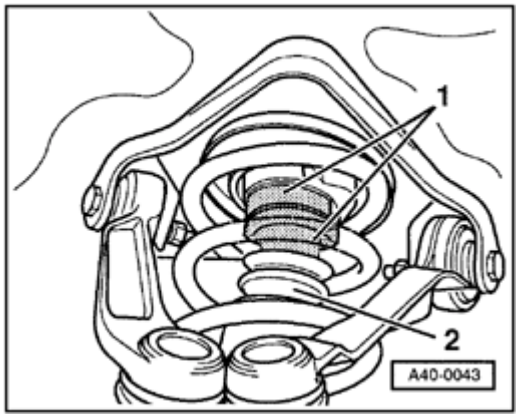

- Pull auxiliary spring -2- down.
- Remove 2 blocking eiements -1- fitted to each suspension strut.

cardiagn.com

59

Undercoating - visual inspection for damage

When performing visual inspection, pay attention to underbody, wheel wells, and rocker panels.

Any damage or defects found must be repaired.

cardiagn.com

60

Lock cylinders, lubricating

- Lubricate with lock cylinder lubricant spray G 000 400 01.

cardiagn.com

61

Door check straps, lubricating

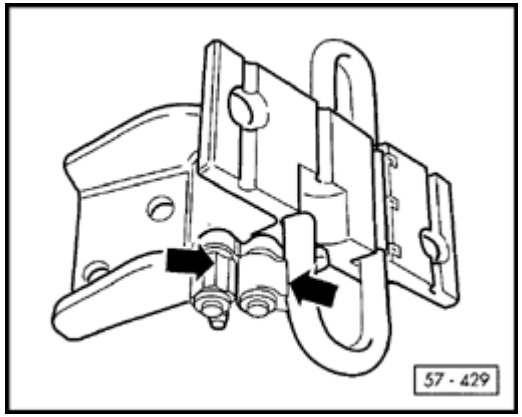

- Lubricate front and rear door check straps only at points indicated -arrows-.
- Lubricate with lubticating paste G 000 150.

cardiagn.com

62

Door locks, locking buttons, child safety lock - checking operation

WARNING!

- ***Remove, clean, and grease all door locks which do not operate freely.***

Door locks and locking buttons:

- Open and close driver and front passenger door. Check whether locking buttons move up and down, respectively, when this is done.

- Press locking button on front passenger door and rear doors down, close doors. Doors must be locked.

It must not be possible to press down locking button on driver door so long as door is open.

Child safety lock (rear doors):

- Move lever on door lock down in direction of arrow (see marking on door lock). Door lever on inside must be blocked and locking button must be pulled up.

cardiagn.com

63

Power window regulators - checking positioning

Power window regulator can lose position memory if battery is disconnected.

- Press switch to raise window fully.
- Again press switch to raise window for an additional 1 second.
- Press switch to lower window. Side window must automatically open to full extent.

cardiagn.com

64

Battery electrolyte level, checking, refilling if necessary

Battery is located in plenum chamber.

- Check electrolyte level:

  - Electrolyte level must be between the min. and max. markings.

- Refill battery cells to max. marking with distilled water, if necessary.

cardiagn.com

65

Battery no-load voltage, testing

Requirements:

- Vehicle must have been standing for at least two hours in the no-load state prior to measurement (no engine starts, no charging and discharging).
- Ignition turned OFF

- Measure voltage with digital multimeter (Fluke 83, or equivalent) between poles of installed battery.

If instrument indicates 12.5 volts or higher, battery is OK.

If voltage is below 12.5 volts, determine cause and repair or replace as necessary.

cardiagn.com

Windshield washer nozzles, adjusting

Check setting of nozzles, adjust if necessary with windshield washer aiming tool 3125A.

CAUTION!

- ***To avoid damage never use a needle or similar device to adjust nozzles.***

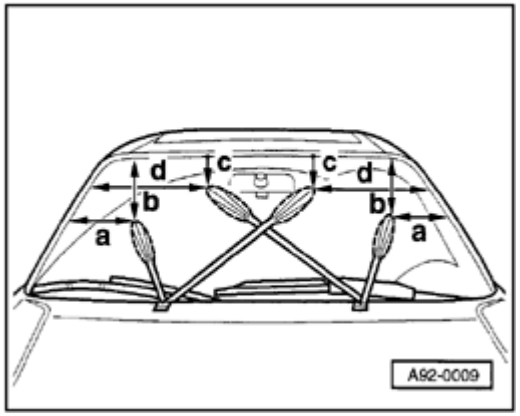

Nozzle setting for windshield:

a = 235 mm (9.25 in.) c = 80 mm (3.15 in.)

b - 445 mm (17.52 in.) d = 620 mm (24.41 in.)

Note:

If spray is uneven or cannot be set to specified dimensions replace spray nozzles.

- Fill windshield washer reservoir.
- Always add windshield cleaner to water in reservoir (antifreeze in winter).

cardiagn.com

Headlights, adjusting

Requirements

- Tires inflated to correct pressure.
- Lenses clean and in proper condition.
- Reflectors in proper condition.
- Springs settled (load vehicle with approx. 75 kg (165 lbs) on driver's seat and roll several meters (yards).
- Vehicle standing on level ground.

Adjust headlight housing from top with screwdriver or allen wrench.

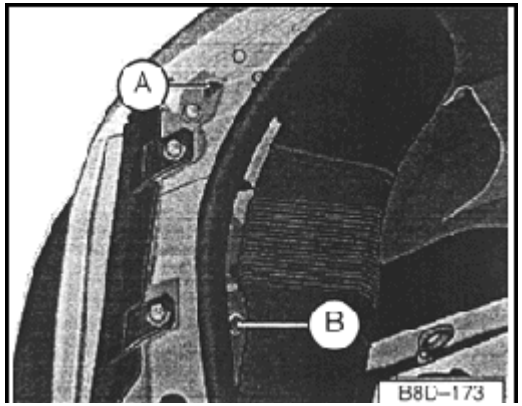

Illustration shows adjusting screws for right headlight. Adjusting screws for left headlight are symmetrically opposite.

A = Vertical adjustment

B = Lateral adjustment

cardiagn.com

Headlights, aiming using Hella Universal Beamsetter IV

Service

Align vehicle headlamps using the VAS 5107 (Hella Universal Beamsetter IV) and the following procedure:

Additional instructions and diagrams ⇒ Instruction Manual for the Hella Beamsetter Series IV

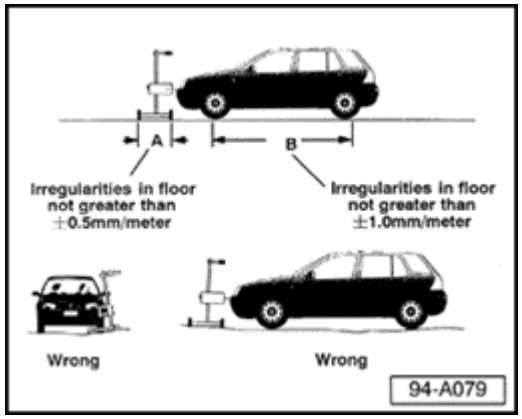

- Position vehicle on a flat floor surface that meets the following (ISO 10640) specifications:
  - 0.5mm or less slant from front wheel to back wheel of the Beamsetter -A-.
  - 1mm or less slant per meter for the length of the vehicle -B-.
- Clean headlight lenses.
- Adjust vehicle tire pressure to specifications.

Have a second technician sit in the driver's seat while aligning the headlights.

- Bounce front and rear of vehicle up and down several times to settle vehicle suspension.

cardiagn.com

Setting low beam alignment of driver's side headlight

- Move Beamsetter into position in front of the vehicle so it is aligned with the vehicle and Beamsetter box is 30 to 70cm (12 to 28 in.) from the driver's side headlight.

- Switch headlights ON in low beam position.

- Align Beamsetter box so it is centered on the headlight (align vertically then horizontally).

Note:

- *Use the arrows on the Beamsetter box as a guide.*

- *You may want to use a straight edge or tape measure, because alignment must be within 3cm (1.2 in.) of the center of the headlight.*

- Without moving the Beamsetter, slide Broad-band sight toward center of vehicle (Broad-band sight can also be moved up and down for a better position).

Use Broad-band sight to make final alignment of Beamsetter box to vehicle by:

cardiagn.com

- Loosening hand-wheel that locks column in place.

- Sighting down through the slit in the Broad-band sight and rotating Beamsetter box and column until two similar points on vehicle are aligned.

cardiagn.com

70

Note:

Try using corners of the headlight housings or two screws that are the same height and as far apart as possible on the vehicle.

- Carefully tighten hand wheel without changing Beamsetter position.

- Find correct State or Province Inclination % specification for the low beam adjustment (If there is no local specification use 1.2%).

Note:

DO NOT use the Inclination % molded into the plastic of the headlight housing near the headlight adjustment screws; it is for Europe only!

- Set Beamsetter "Scaled wheel" to the proper low beam inclination %.

- Adjust height (vertical) alignment first. Turn headlight height adjuster screw to align the upper edge of the flat portion of the beam with the center horizontal line of the grid on the Beamsetter pattern screen.

cardiagn.com

71

Note:

VOL is the correct beam pattern for both right and left headlights.

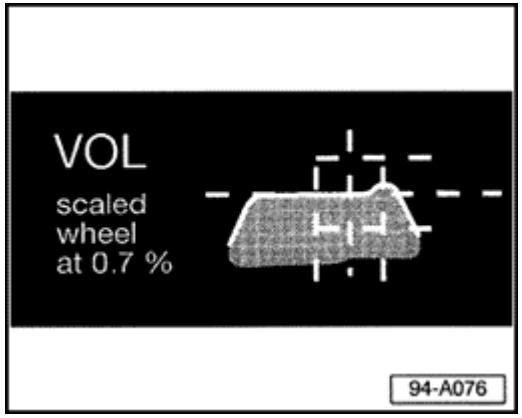

- Adjust lateral (horizontal) alignment of driver's side headlight so that the peak (highest point) of the headlight beam pattern aligns with the right edge of the target box of the grid on the pattern screen (it should match the VOL pattern shown on the Beamsetter box).

Note:

If the height alignment changed, readjust.

Checking driver's side headlight high beam alignment

- Switch headlights ON in high beam position.
- Realign Beamsetter box with the high beam headlight if necessary.

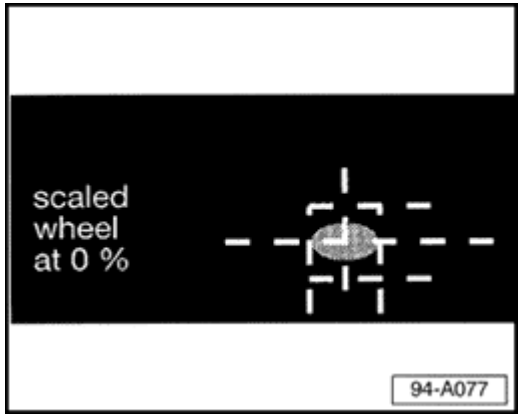

- Set Beamsetter "Scaled wheel" to 0%.
- Cover low beam lamp (use hand or small piece of cardboard) and check that the "hot spot" of high beam pattern is centered on the square target box of the pattern screen.

cardiagn.com

72

Note:

High beam pattern is built into the reflector design and cannot be adjusted separately.

If high beam pattern is way out of adjustment:

- Inspect for reflector damage.

- Replace reflector if needed.

Note:

Always align headlight in the low beam position.

Aligning fog lamp

- Switch fog lamps ON.

- Align Beamsetter box with fog lamp (make sure it is between 30 and 70cm from the fog lamp lens).

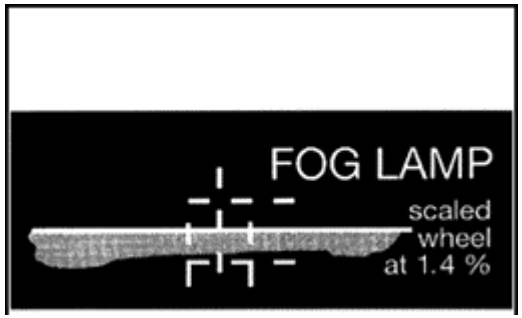

- Set Beamsetter scaled wheel to 1.4%.

Adjust fog lamp so the top of the beam pattern aligns with the centerline of the target grid on the beam pattern screen.

cardiagn.com

73

Passenger's side headlight, alignment

- Move Beamsetter to the passenger side of the vehicle and follow the same procedures to align the Beamsetter box to the headlamp.

- Align headlight low beam, check high beam and align fog lamp.

Note:

Make sure to reset the Beamsetter "Scaled wheel" to the proper setting each time you change from low beam to high beam or to fog lamp.

- Ensure that headlights and vehicle body are clean and free of fingerprints.

cardiagn.com

74

Headlight cleaning system nozzles, adjusting

Check setting of nozzles, adjust if necessary with Windshield Washer Aiming Tool 3125A.

CAUTION!

- ***To avoid damage never use a needle or similar device to adjust nozzles.***

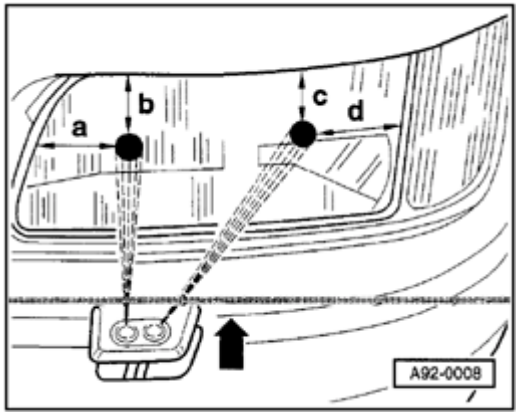

Nozzle setting:

a = 65 mm (2.56 in.) c = 40 mm (1.57 in.)

b = 50 mm (1.97 in.) d = 90 mm (3.54 in.)

cardiagn.com

75

Wiper blades, adjusting parked position

Check wiper blades and arms for signs of damage, replace if necessary.

Parked position:

Windshield:

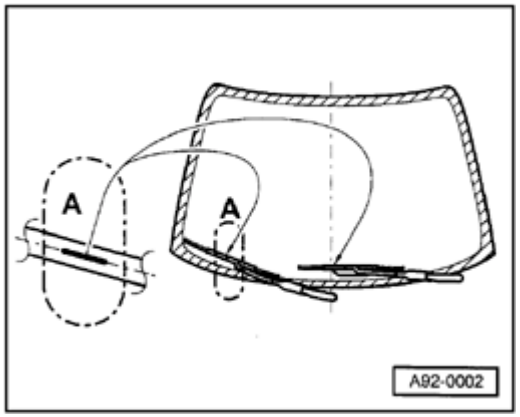

- Position wiper blades on markings -A- in windshield and tlghten.
- Operate single wipe control.
- Align wiper arms and tighten.

Tightening torque of wiper arms: 16 Nm (12 ft lb).

cardiagn.com

76

Wiper blade contact angle, adjusting

Note:

Possible causes of wiper blade chatter:

- *Scratched windshield*
- *Rubber part of wiper blade is out of the frame or torn*
- *Windshield wiper arms/blades are loose or bent*
- *Wiper blades are waxy or buckled*

If none of these causes apply to the problem, then the angle of the wiper arms to the windshield must be checked and if necessary adjusted before replacing the wiper blades.

Special tools test equipment and auxiliary items

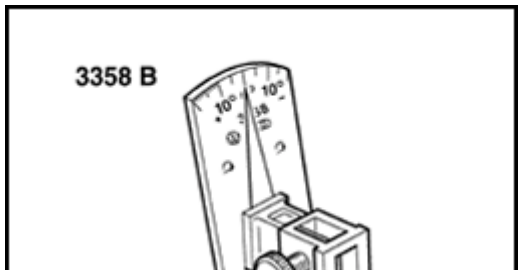

3358 B Windshield wiper adjuster.

cardiagn.com

77

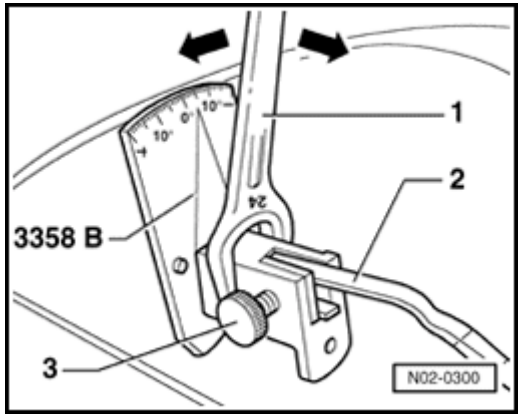

Checking wiper arm angle

- Bring wiper arms into park position.

- Remove wiper blade.

- Insert wiper arm -2- into 3358 B windshield wiper adjuster and lock in place with stop screw -3-.
- Compare displayed angle with specified value.

Specified values for angle of wiper arm to windshield

Driver's side	-3°
Passenger side	-3°
Tolerance	±0°

cardiagn.com

78

Adjusting wiper arms

- Bring wiper arms into park position.

- Remove wiper blade.

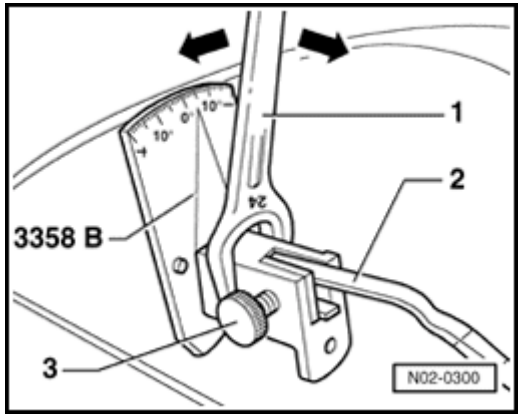

- Place wiper arm -2- in 3358 B windshield wiper adjuster and lock in place with stop screw -3-.
- Place 24 mm open end wrench -1- onto adjusting device as shown and set wiper arm -2- to specified value (arrow)

  Specified values ⇒ Page 77 .
- Loosen stop screw -3- and remove wiper arm -2- from adjusting device.
- Again place wiper arm -2- into windshield wiper adjuster and again lock in place with stop screw -3-.
- Compare displayed angle with specified value.

  Specified values ⇒ Page 77 .
- If necessary, repeat setting and checking procedure until specified value is attained.
- Remove adjusting device and install wiper blade.

cardiagn.com

79

Radio anti-theft coding, activating

See Radio Owner's Manual.

cardiagn.com

80

Service Reminder Indicator (SRI), resetting

Vehicles up to model year 1997

If service date has been reached, service event which is due appears as a flashing display after ignition is turned ON. Flashing continues for a few seconds after engine is started.

The following displays are possible:

OIL	Engine oil change
In 1	Inspection service
In 2	Inspection service with additional work

A service event which is due is already displayed 1000 km (620 mi.) or 10 days before.

Service Reminder Indicator (SRI) must be matched during Delivery Inspection or during each Inspection Service to the km and time specifications until next service event with help of Scan Tool (ST) VAG 1551.

- Select adaptation channels individually and enter relevant specified values.

cardiagn.com

81

Service Type	Adaptation channel	Specification	Entry
OIL	05	12000 km	00012
In 1 (distance)	06	24000 km	00024
In 1 (time)	07	365 days	00036
In 2	08	730 days	00073

cardiagn.com

82

The following service types should be adapted depending on the inspections performed.

Inspection performed	Service type to be adapted	Adaptation channel
Delivery Inspection	OIL	05
	In 1 (distance)	06
	In 1 (time)	07
	In 2	08
OIL	OIL	05
In 1	OIL	05
	In 1 (distance)	06
	In 1 (time)	07
In 2	OIL	05
	In 1 (distance)	06
	In 1 (time)	07
	in 2	08

cardiagn.com

83

Scan Tool (ST) VAG 1551 Connecting

- Move shift lever into position "P" or "N" and apply parking brake (vehicles with Automatic Transmissions).

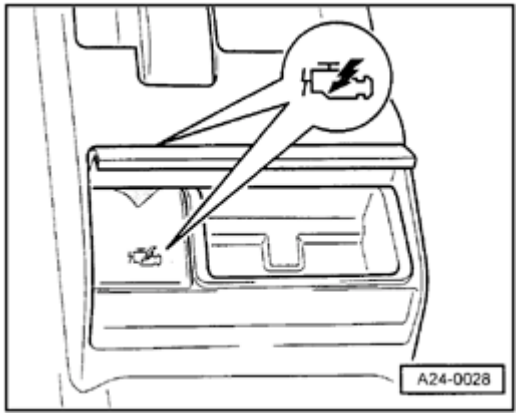

- Open rear ashtray (center console) and remove Data Link Connector (DLC) cover.

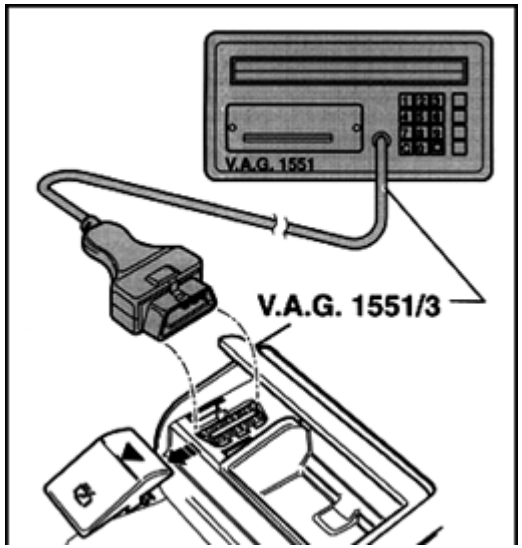

- With ignition turned OFF connect Scan Tool (ST) VAG 1551 to DLC with Adapter Harness VAG 1551/3.

Service Reminder Indicator (SRI) Programming

- Turn ignition ON.
- Press key -1- for "Rapid Data Transfer" mode.
- Press keys -1- and -7- for address word "Dash Panel Insert"; confirm with key -Q-.
- Advance program with → key.
- Press keys -1- and -0- for "Adaptation" function; confirm with key -Q-.

cardiagn.com

84

Channel 05 Service Reminder Indicator (SRI) display for OIL

- Press keys-0-and-5-for "Adaptation Channel 05"; confirm with key-Q-.

Channel 5 Adaptation 1 →
< - 1 3 - >

- Display shows kilometers remaining until OIL service (in this case 00001, indicating 1,000 km remaining).
- Press → key to advance program.

Channel 5 Adaptation 1 Q
Enter Adaptation value XXXXX

Appears in display.

- Enter 00012 for 12,000 km until next oil change; confirm with key -Q- The figure can be entered in increments of 1000 km.

Channel 5 Adaptation 12 Q
< - 1 3 - >

- Newly entered figure appears in display; confirm with key -Q-.

Channel 5 Adaptation 12 Q
Store changed value?

- Confirm with key -Q-.

Channel 5 Adaptation 12 →
Changed value is stored

- Advance program with → key.

Rapid data transfer HELP
Select function XX

- Adaptation of Channel 05 is ended.

cardiagn.com

85

Channel 06 Service Reminder Indicator (SRI)
Display for Inspection 1

- Press keys -0- and -6- for "Adaptation Channel 06"; confirm with keys -Q-.

Channel 6 Adaptation 1 →
< - 1 3 - >

- Display shows kilometers remaining until Inspection -1- (in this case 00001, indicating 1,000 km remaining).
- Press → key to advance program.

Channel 5 Adaptation 1 Q
Enter Adaptation value XXXXX

Appears in display.

- Enter 00024 for 24,000 km until next inspection 1; confirm with key -Q-. The figure can be entered in increments of 1000 km.

Channel 6 Adaptation 24 Q
< - 1 3 - >

- Newly entered figure appears in display; confirm with key -Q-.

Channel 6 Adaptation 24 Q
Store changed value?

- Confirm with key -Q-.

Channel 6 Adaptation 24 →
Changed value is stored

- Advance program with → key.

Rapid data transfer HELP
Select function XX

- Adaptation of Channel 06 is ended.

cardiagn.com

86

Channel 07 Service time until Inspection 1

- Press keys -0- and -7- for "Adaptation Channel 07"; confirm with key -Q-.

Channel 7 Adaptation 1 →
< - 1 3 - >

- Display shows time remaining in days until Inspection -1- (in this case 00001, indicating 10 days remaining).
- Press → key to advance program.

Channel 7 Adaptation 1 **Q**
Enter Adaptation value XXXXX

Appears in display.

- Enter 00036 for 365 days until next inspection 1; confirm with key -Q-. The figure can be entered in increments of 10 days.

Channel 7 Adaptation 36 **Q**
< - 1 3 - >

- Newly entered figure appears in display; confirm with key -Q-.

Channel 7 Adaptation 36 **Q**
Store changed value?

- Confirm with key -Q-.

Channel 7 Adaptation 36 →
Changed value is stored

- Advance program with → key.

Rapid data transfer **HELP**
Select function XX

- Adaptation of Channel 07 is ended.

cardiagn.com

87

Channel 08 Service time until Inspection 2

- Press keys -0- and -8- for "Adaptation Channel 08"; confirm with key -Q-.

Channel 8 Adaptation 1 →
< - 1 3 - >

- Display shows time remaining in days until Inspection 2 (in this case 00037, indicating 370 days remaining).
- Press → key to advance program.

Channel 8 Adaptation 1 **Q**
Enter Adaptation value XXXXX

Appears in display.

- Enter 00073 for 730 days until next inspection 1; confirm with key -Q-. The figure can be entered in increments of 10 days.

Channel 8 Adaptation 73 **Q**
< - 1 3 - >

- Newly entered figure appears in display; confirm with key -Q-.

Channel 8 Adaptation 73 **Q**
Store changed value?

- Confirm with key -Q-.

Channel 8 Adaptation 73 →
Changed value is stored

- Advance program with → key.

Rapid data transfer **HELP**
Select function XX

- Adaptation of Channel 08 is ended.

cardiagn.com

88

Resetting service interval display

Vehicles from model year 1998 ▶

The service interval display must be reset as part of the Pre-Delivery Inspection and also after every Oil Change Service and Inspection Service.

Delivery inspection

The service interval display can be reset using one of two methods:

- Using the adjustment buttons for the trip recorder and clock on the instrument cluster

- Reset "service OIL" and "service INSP" ⇒ Page 92

or

- Using VAG 1551 Scan Tool

- Select adaptation channel 02 and enter adaptation value "00000" ⇒ Page 89

cardiagn.com

89

Oil Change Service and Inspection Service

When a service is due, the type of service required will be indicated by a flashing message on the trip recorder display when the ignition is switched on. The message will continue to flash for up to 60 seconds after the engine has been started.

Display	Type of service due
service OEL	Oil Change Service
service INSP	Inspection Service

When a service is due, this will be indicated either 1,000 km or 10 days in advance.

Resetting service interval display with VAG 1551

- Connect VAG 1551 ⇒ Page 83 .

- Switch ignition on.

VAG On Board Diagnostic HELP
1 - Rapid data transfer1)
2 - Blink code output1)

Indicated in display ([1]) appears alternately)

- Enter "1" to select "Rapid data transfer".

cardiagn.com

90

Rapid data transfer HELP **Select function XX**	Indicated on display - Enter "17" to select address word "Instrument cluster" and confirm entry with Q key.
8D0919860G B5 Instr cluster VDO D09 → **Coding 00042 WSC 12345**	Indicated on display (example) - Press → key twice. - Enter "10" to select the function "Adaptation" and confirm entry with Q key.
Adaptation **Feed in channel number XX**	Indicated on display - Enter "02" to select adaptation channel 02 and confirm entry with Q key.
Channel 2 Adaptation 11 → **- ↑ - ↓ -**	Indicated on display The type of service will be indicated (example: 11) 0 - means no service is due 1 - means that an Oil Change Service is due 10 - means that an Inspection Service is due 11 - means that both and Oil Change Service and an Inspection Service are due - Press → key.

cardiagn.com

91

Channel 2 Adaptation 11 Q

Enter adaptation value XXXXX

Indicated on display

- Enter appropriate adaptation value for type of service which has been performed. The values are as follows:

Adaptation value	Type of service cancelled
00000	Delivery inspection
00000	service OIL and service INSP
00010	service OIL
00001	service INSP

Example:

- Enter "00000".

Channel 2 Adaptation 11 Q

Enter adaptation value 00000

Indicated on display

- Confirm entry with Q key.

Channel 2 Adaptation 0 Q

- ↑ - ↓ -

Indicated on display

- Confirm entry with Q key.

Channel 2 Adaptation 0 **Q**

Store changed value?

Indicated on display

- Confirm entry with Q key.

Channel 2 Adaptation 0 →

Changed value is stored

Indicated on display

cardiagn.com

- Press → key to terminate resetting of service interval display.

cardiagn.com

92

Resetting service interval display with adjustment buttons for trip recorder and clock.

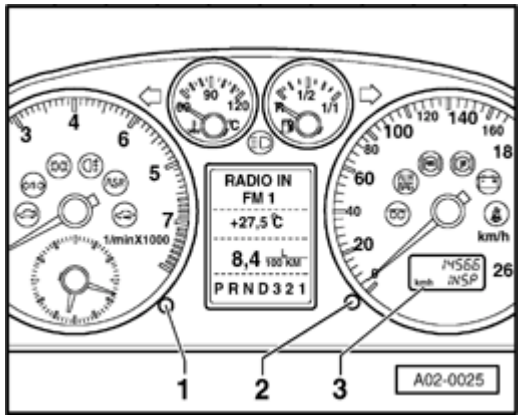

- Switch ignition off.

- Press trip recorder reset button -2- on instrument cluster and at same time switch ignition on.

The trip recorder display -3- will read "service OIL".

- Release button.
- Pull clock adjuster button -1- on instrument cluster and hold for approx. 2 seconds. This resets "service OIL" display.

Note:

Depending on the make of the instrument cluster, the display on the trip recorder will either continue to read "service OIL" (Nippon Seiki) or change to "- - -" (VDO).

- Press trip recorder reset button -2- again to advance to next type of service.
- Release button.

The trip recorder display -3- will read "service INSP".

cardiagn.com

93

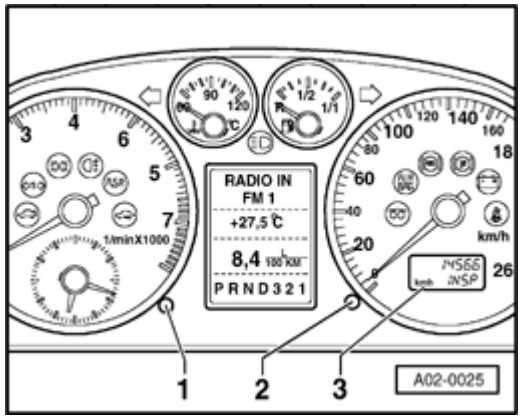

- Pull clock adjuster button -1- on instrument cluster and hold for approx. 2 seconds. This resets "service INSP" display.

Note:

Depending on the make of the instrument cluster, the display on the trip recorder will either continue to read "service INSP" (Nippon Seiki) or change to "- - -" (VDO).

- Switch ignition off.

cardiagn.com

94

Clock, setting

Clock is included in tachometer display. To set time, pull out instrument panel light dimmer switch.

When switch is pulled out briefly, hands will advance a minute at a time. Pulled out and held, hands will advance slowly at first, then rapidly.

cardiagn.com

95

RAPGARD®, inspection, removal and disposal

From my 2002

Service

Within 48 Hours after arrival at Dealer:

Inspection

- Inspect RAPGARD® for damage or peeling.

If RAPGARD® is disturbed (dented, scratched, etc.):

- You must note the damage on the Carrier Delivery Receipt, including damage type, extent and location. Failure to note damage on the Carrier Delivery Receipt will result in non-payment of the repair.

Note:

- *RAPGARD® must be removed from the vehicle no later than six months after application. See sticker (location on vehicle body varies) for detailed information.*

cardiagn.com

96

Within 72 Hours prior to delivery to the Customer:

- Remove RAPGARD® from vehicle.
- Wash vehicle exterior.
- Inspect paint surfaces, moldings and glass.
- Protect the paint surface of all new vehicles by applying 3M Perfect-It ™ Paste Wax (3M™Part No. 39526) or equivalent.

Removal

- Vehicle must be at room temperature.
- The ideal body surface temperature for RAPGARD® removal is 60° F (15.5° C) to 80° F (26.6° C).

If body surface temperatures are below 60° F (15.5° C) or above 80° F (26.6° C) then:

- Removal procedure should be performed indoors after surface temperatures have been allowed to stabilize within the given range.

cardiagn.com

- Rinse vehicle thoroughly with water to remove surface dirt or dust and to help stabilize body surface temperatures.

- Starting at the corners of each panel, carefully remove RAPGARD® from vehicle.

cardiagn.com

97

RAPGARD®, paint inspection after removal

- Inspect painted surfaces under one of the following lighting conditions:

♦ Indoors under fluorescent lighting.

♦ Outdoors under bright sunlight.

Important!:

If any defects on the exterior have been identified (scratches, dings, dents and other types of body damage):

- Contact your Service Manager and arrange to repair defects immediately.

Note:

After removal of RAPGARD®, some vehicles may exhibit temporary paint discoloration or paint swelling (caused by trapped moisture under the RAPGARD®).

♦ *This temporary swelling is caused by the paint finish absorbing moisture trapped under the RAPGARD® film.*

cardiagn.com

- *This swelling will disappear with exposure to the sun or heat lamps within 2 - 3 hours. Severe Paint swelling may require 2 - 3 days to recover.*

DO NOT buff or refinish paint for this condition!

cardiagn.com

98

Adhesive residue removal

CAUTION!

Always read and follow manufacturer Cautions and Warnings regarding use of product.

If RAPGARD® adhesive residue remains on paint finish, remove with a non-abrasive polishing product such as, (3M Part No. 5995) light colors or (3M Part No. 5996) dark colors.

Thick lines of adhesive residue can be removed with general purpose adhesive cleaner (3M Part No. 08987-aerosol, or Part No, 08984-qt. can) or equivalent.

Note:

Paint discoloration (looks like shaded or dark magic marker lines) can be removed with a heat gun using the following procedure:

- Hold heat gun approximately 3 in. away from affected paint surfaces and apply heat using slow oscillating motions until discoloration is gone.

- If discoloration remains, wipe the heated area with Isopropyl alcohol and repeat procedure to increase surface drying.

cardiagn.com

99

Important!

After inspecting and removing RAPGARD®, washing vehicle, inspecting and repairing any defects in paint surfaces, moldings and glass:

- Protect the vehicle paint surface by applying 3M Perfect-It™ Paste Wax (3M Part No. 39526) or equivalent.

RAPGARD® Disposal

RAPGARD® can be disposed as normal paper waste. If unsure about proper disposal procedures in your area, check local regulations.

cardiagn.com

100

Transportation wiper blades, removing at vehicle delivery

From my 2002

Service

For all Models arriving at your dealership with transportation wiper blades:

Transportation wiper blades (except A6 and A4 Models, see notes below) are shorter than original equipment wiper blades and colored blue or yellow.

Note:

- *Until further notice, A6 Models will be equipped with a set of original equipment blades (to be used as transportation blades).*
- *A new set of wiper blades are located in the trunk and must only be installed at time of vehicle delivery.*
- *For all Models except A6 and A4, original equipment blades are temporarily installed then removed during the Pre-Delivery Inspection (PDI) to check wiper blade park position only.*

cardiagn.com

- *For A4 Models, the transportation wiper blades (yellow) slide over the original equipment blades (already installed on the wiper arms).*

To ensure customer satisfaction, leave transportation wiper blades on vehicle until time of retail vehicle delivery.

cardiagn.com

101

Transportation wiper blades, removing

Transportation blades can easily be removed as follows:

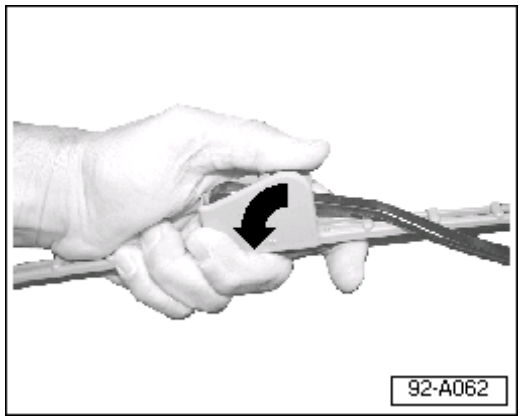

- Grasp blade as shown and rotate in direction of arrow (toward windshield).

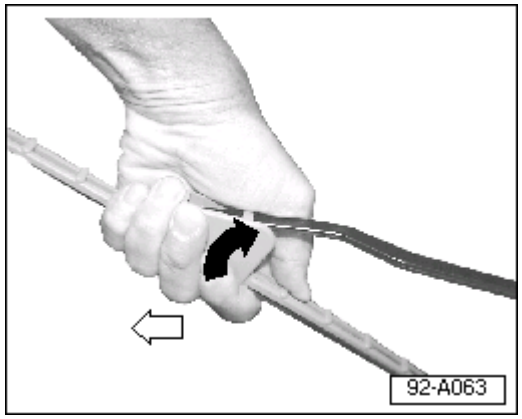

- Rotate blade in opposite direction (black arrow) then, carefully slide blade off wiper arm.

Note:

Wiper arm/blade alignment has been preset at the factory, then checked and adjusted (if necessary) during the PDI.

DO NOT twist or bend the wiper arm. If wiper arm/blade alignment is incorrect, chattering and/or streaking will occur.

Transportation wiper blades, removing (A4)

- New style original equipment blade (already installed on wiper arms),

cardiagn.com

to remove slide transportation blades off original equipment wiper blades.

cardiagn.com

102

If arm has been bent:

⇒ *Repair Manual, Electrical Equipment, Repair Group 92*

- Install original equipment wiper blades (located in trunk) at the time of retail vehicle delivery.

Note:

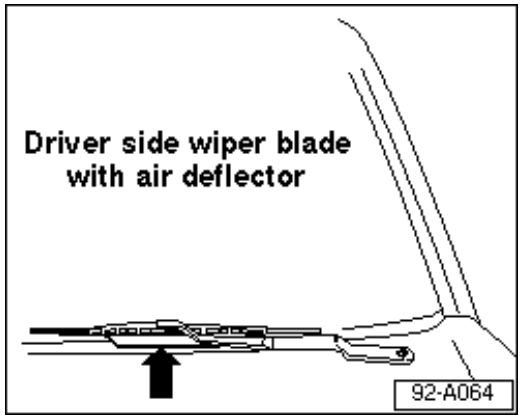

- *Wiper blade with air deflector (arrow) must be installed on driver's side with deflector on bottom of wiper blade.*

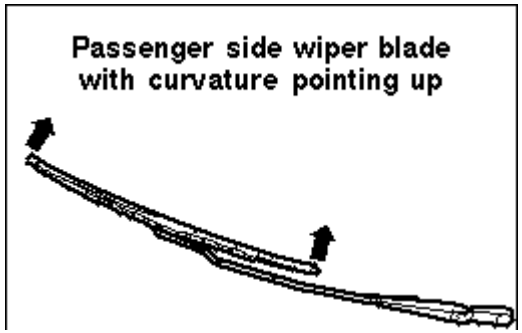

- *Passenger's side wiper blade may be curved, install with curved ends of blade pointing up.*

Wiper blades, installing (A4)

No action necessary after removing transportation blades.

cardiagn.com

103

Underbody closeout cover, installing at Perfect Delivery Inspection (PDI)

To my 2002

Condition

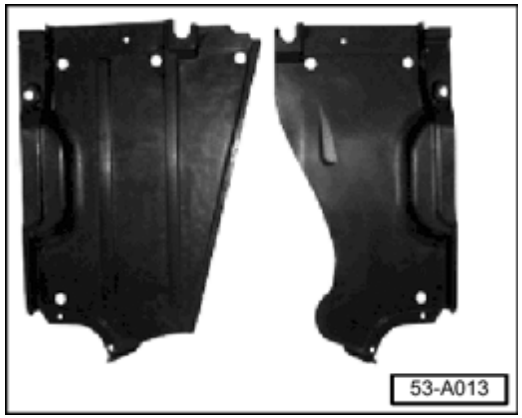

New vehicles must have the rear under body close-out cover installed during the PDI.

Covers were removed to access tie down cavities for transportation purposes.

Production

Beginning Jan. 2002, new close-out covers (with holes for tie down access) will be installed.

Service

Note:

Due to the vehicle pick up points, to ease installation of the close-out covers, the use of a drive on hoist (i.e. alignment hoist) may be required.

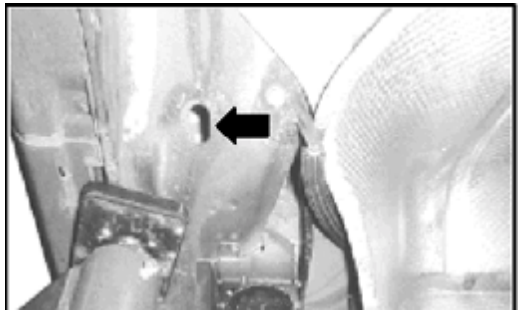

- Install rubber body plugs into vehicle tie down cavity (arrow).

Note:

Failure to install rubber plugs into tie down cavity will cause wind/road noise inside vehicle.

cardiagn.com

104

- Remove rear close-out cover plastic nuts and retainer pins.

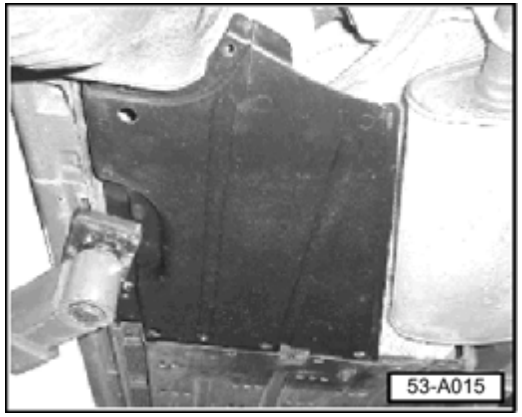

- Install covers by carefully manipulating them into place.

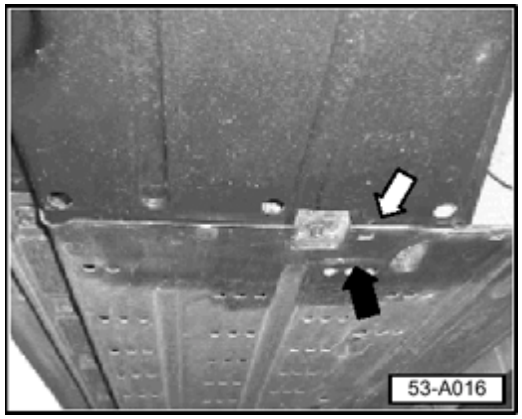

- Front of covers (white arrow) must be between larger body cover (black arrow) and body.
- Reinstall retainer pins.

cardiagn.com

105

- Reinstall close-out cover plastic nuts.

When procedure applies to vehicles within the New Vehicle Limited Warranty, use the following:

Part Identifier:	5324
Labor Operation:	53242400 20TU

cardiagn.com